US 20160296839A1

(19) **United States**

(12) **Patent Application Publication** (10) **Pub. No.: US 2016/0296839 A1**

Brav et al. (43) **Pub. Date: Oct. 13, 2016**

(54) **GAZE AND CONDITION FEEDBACK FOR ENHANCED SITUATIONAL AWARENESS**

(71) Applicant: **Elwha LLC**, Bellevue, WA (US)

(72) Inventors: **Ehren J. Brav**, Bainbridge Island, WA (US); **Alistair K. Chan**, Bainbridge Island, WA (US); **William David Duncan**, Mill Creek, WA (US); **Michael Allan Schneider**, Bainbridge Island, WA (US)

(73) Assignee: **Elwha LLC**, Bellevue, WA (US)

(21) Appl. No.: **15/147,602**

(22) Filed: **May 5, 2016**

Related U.S. Application Data

(63) Continuation of application No. 15/004,522, filed on Jan. 22, 2016, which is a continuation-in-part of application No. 14/746,454, filed on Jun. 22, 2015.

(60) Provisional application No. 62/234,498, filed on Sep. 29, 2015, provisional application No. 62/090,751, filed on Dec. 11, 2014.

Publication Classification

(51) **Int. Cl.**

A63F 13/285	(2006.01)
A63F 13/5378	(2006.01)
A63F 13/5372	(2006.01)
H04B 1/3827	(2006.01)
A63F 13/213	(2006.01)

(52) **U.S. Cl.**

CPC ***A63F 13/285*** (2014.09); ***H04B 1/385*** (2013.01); ***A63F 13/213*** (2014.09); ***A63F 13/5372*** (2014.09); ***A63F 13/5378*** (2014.09); *H04B 2001/3866* (2013.01); *A63F 2300/8082* (2013.01); *A63F 2300/308* (2013.01)

(57) **ABSTRACT**

An electronic game feedback system includes a feedback device and a processing circuit. The feedback device is configured to provide feedback to a user of an electronic game. The processing circuit is configured to control operation of the feedback device to provide the feedback to the user based on condition data regarding a condition of a primary object within a virtual environment of the electronic game. The condition includes at least one of a health level, an armor level, a shield level, and a power level of the primary object.

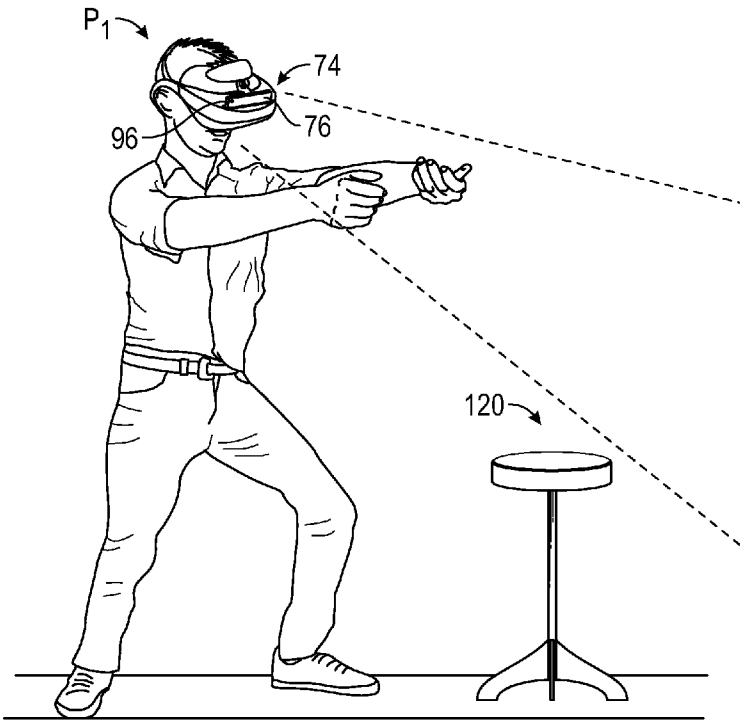

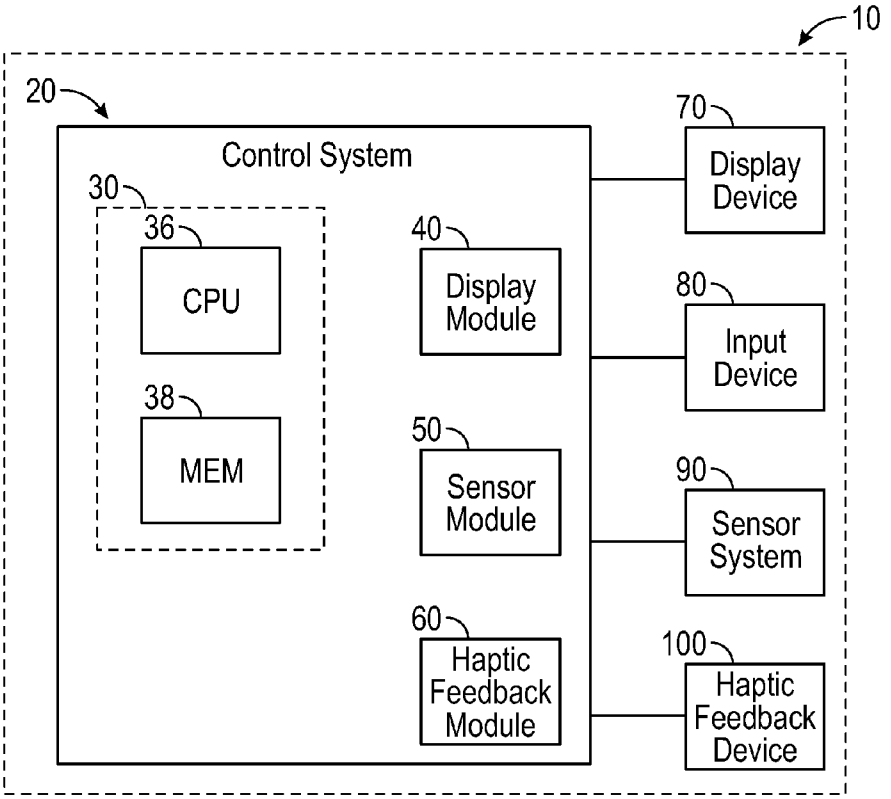
10
20
Control System
30
36
CPU
38
MEM
40
Display Module
50
Sensor Module
60
Haptic Feedback Module
70
Display Device
80
Input Device
90
Sensor System
100
Haptic Feedback Device

FIG. 1

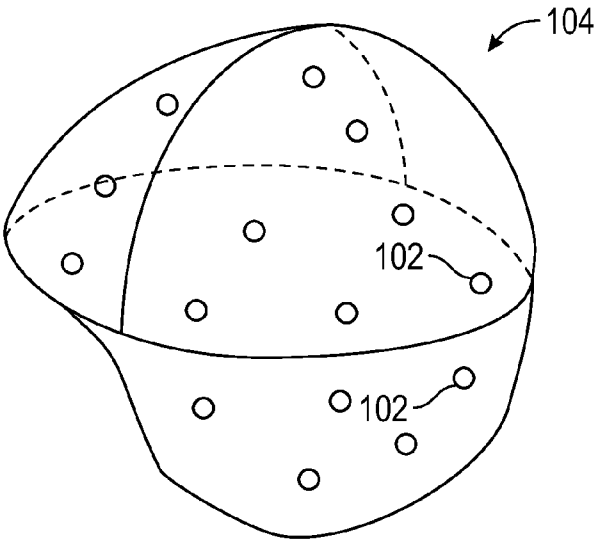

FIG. 2A

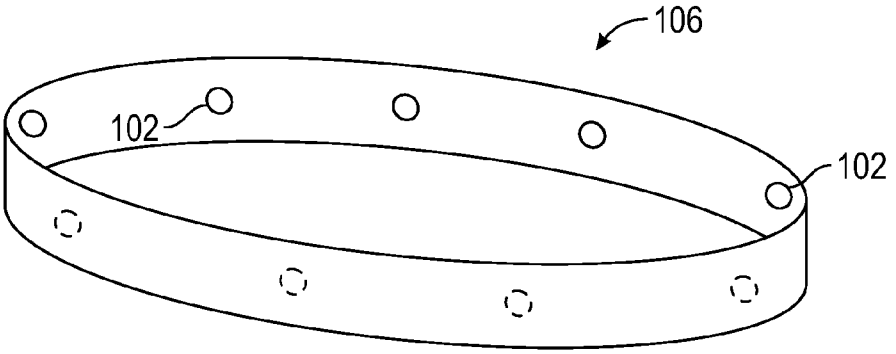

FIG. 2B

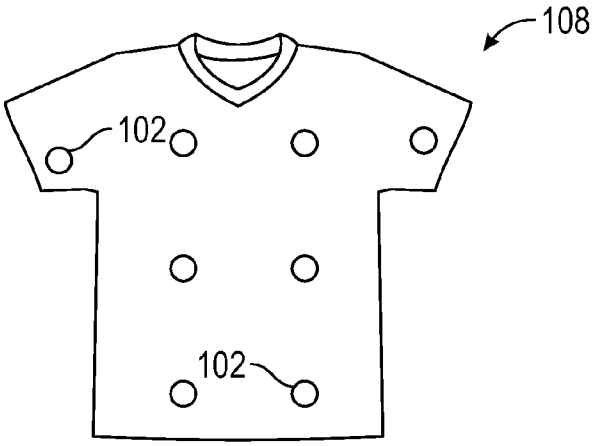

FIG. 2C

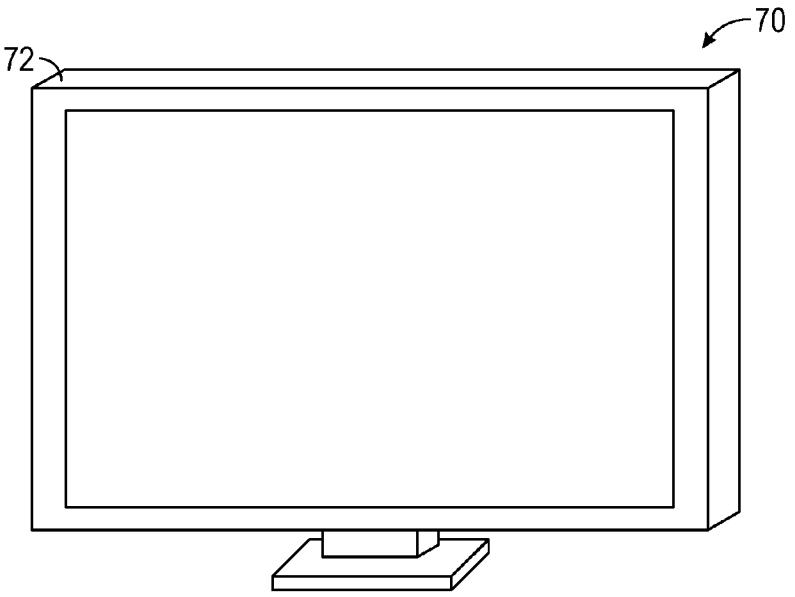

FIG. 3A

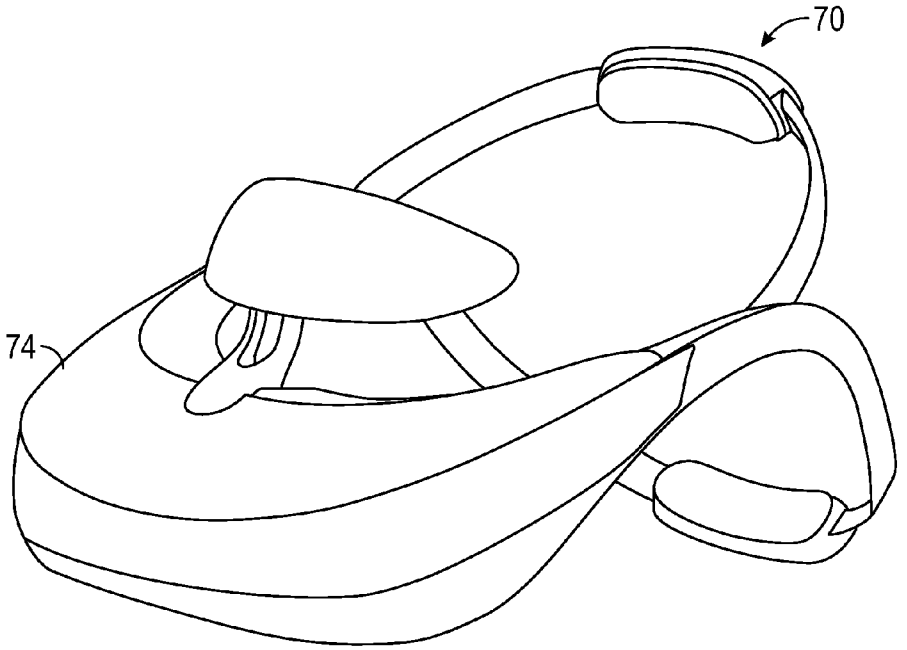

FIG. 3B

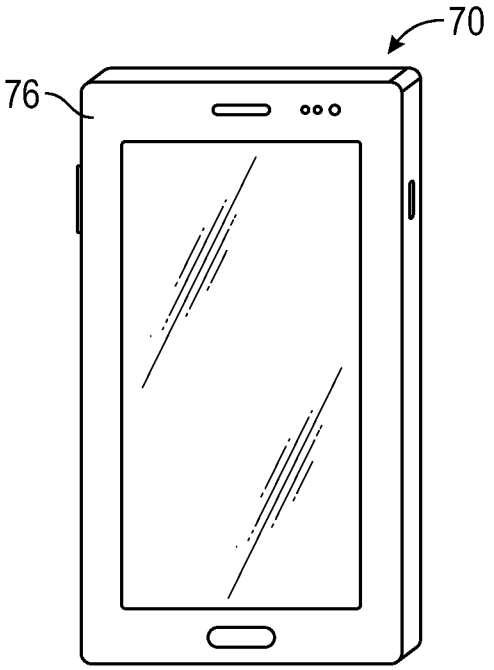

FIG. 3C

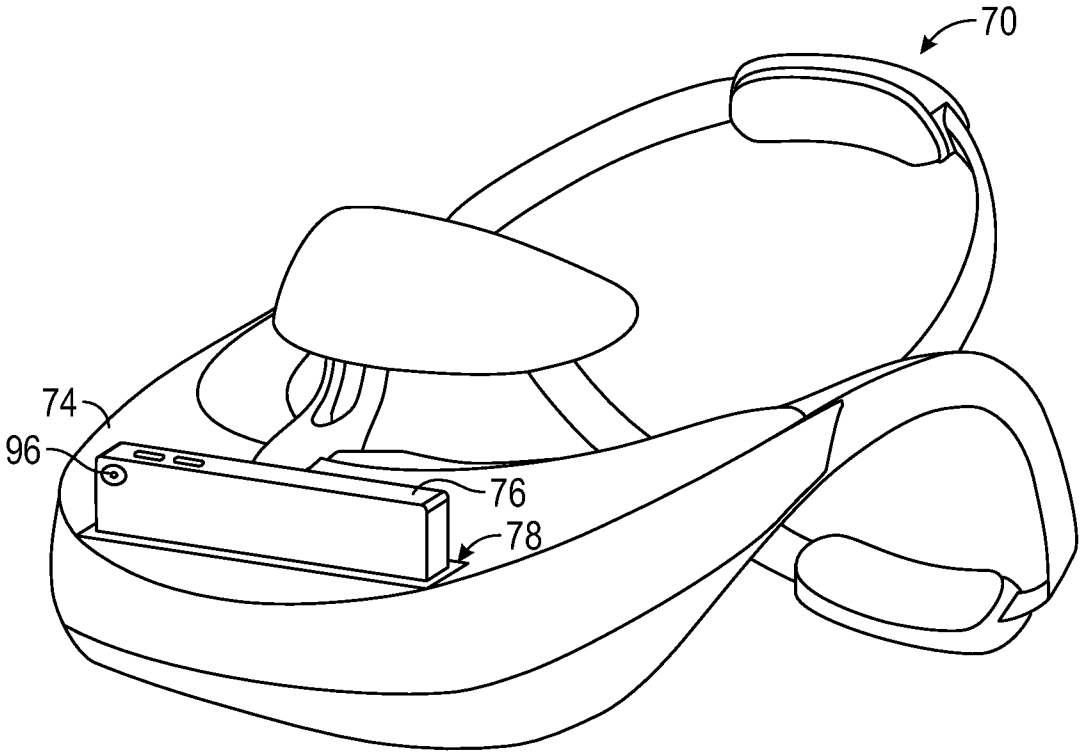

FIG. 3D

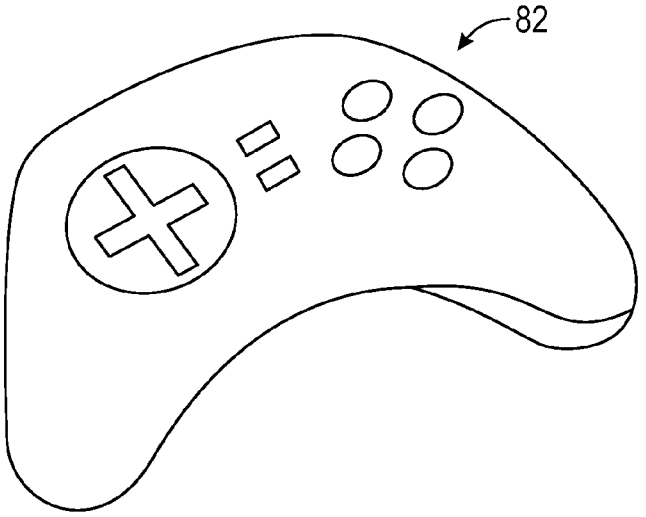

FIG. 4A

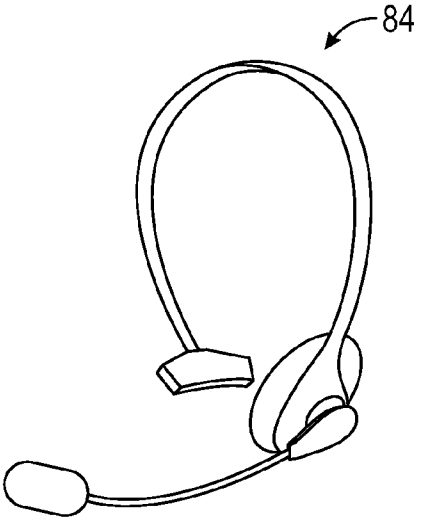

FIG. 4B

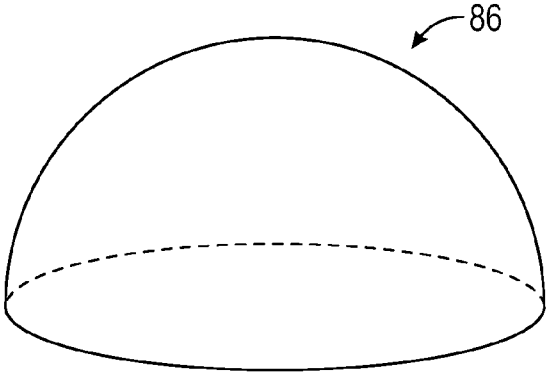

FIG. 4C

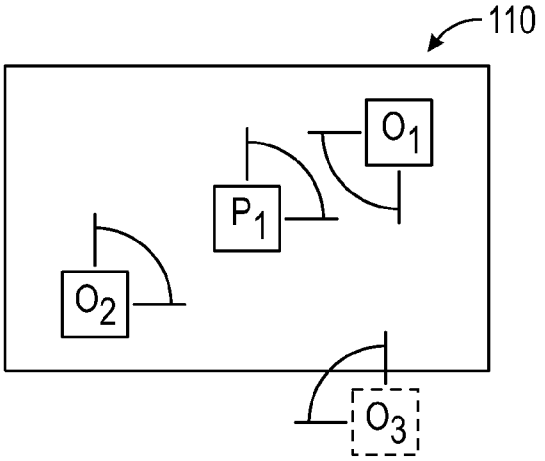

FIG. 5

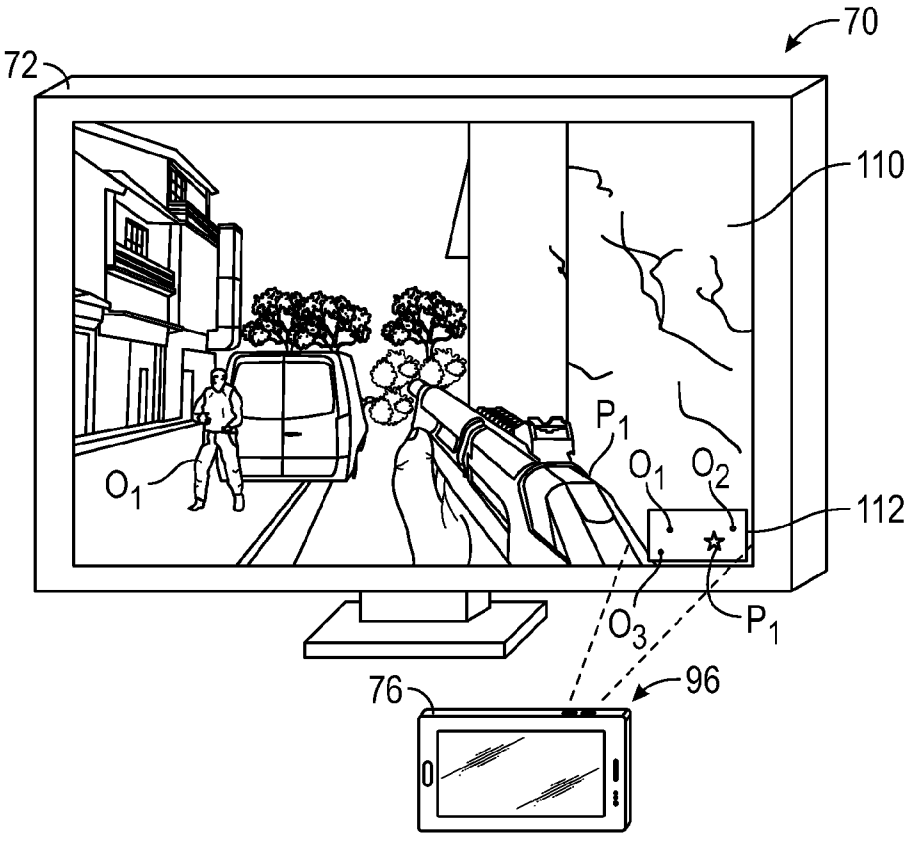

FIG. 6

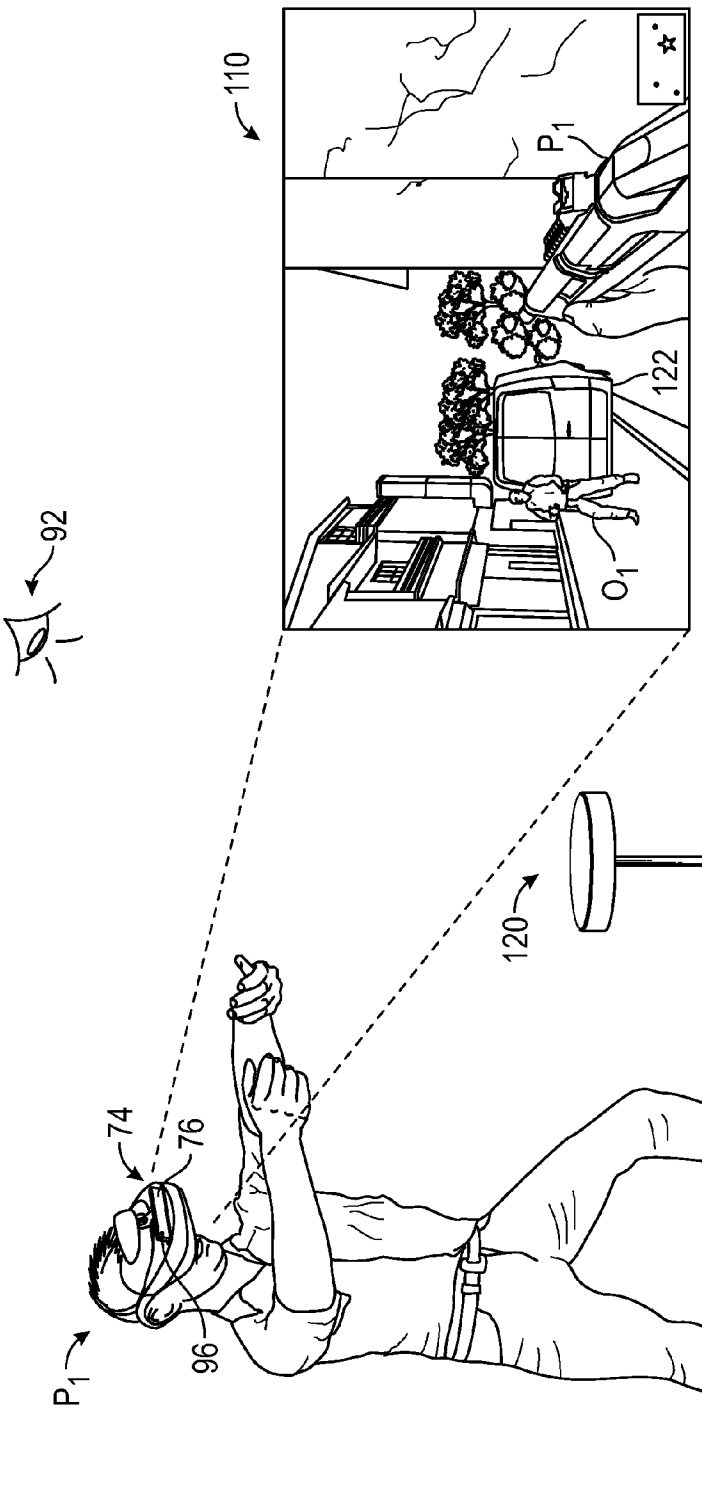

FIG. 7B

FIG. 7A

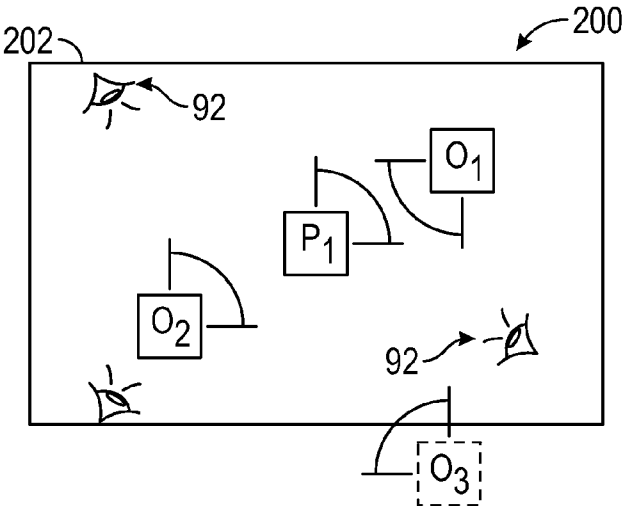

FIG. 8

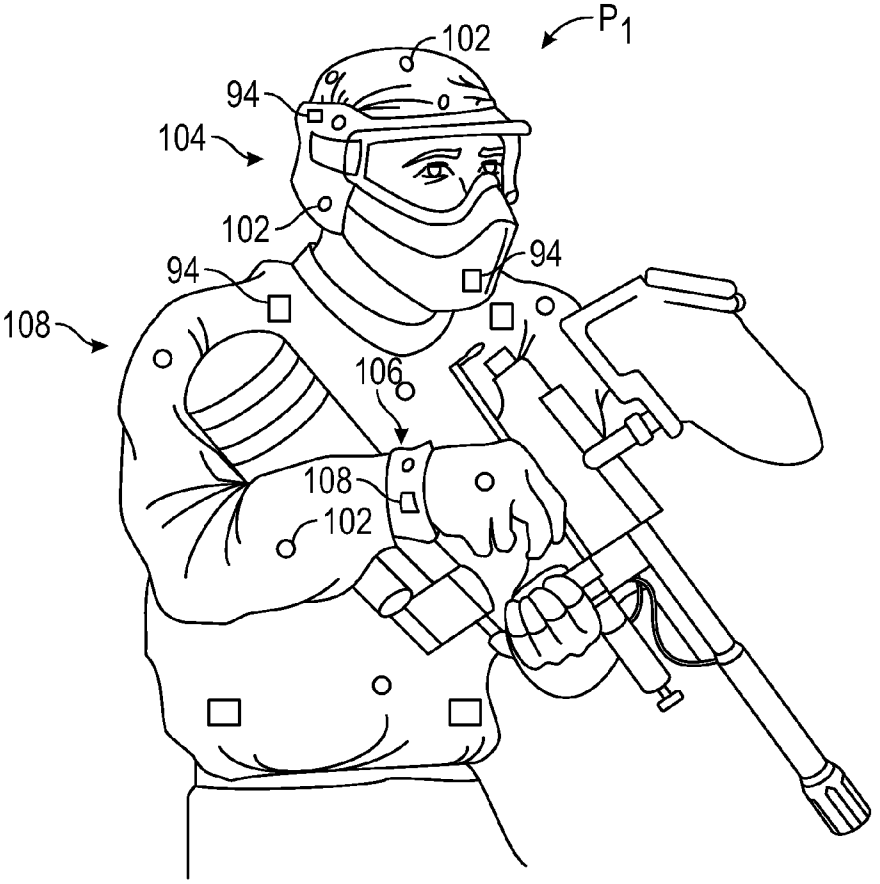

FIG. 9

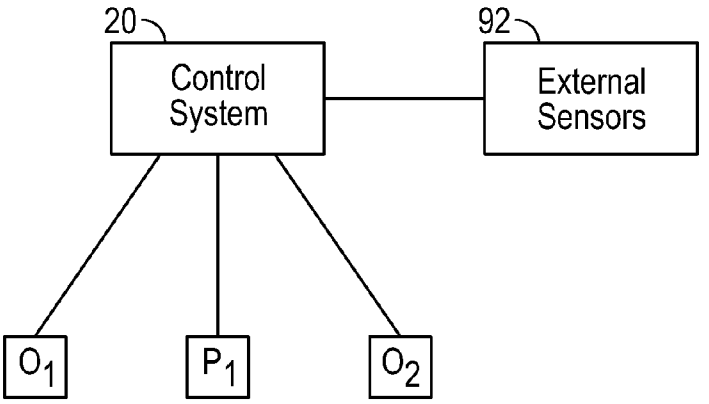

FIG. 10A

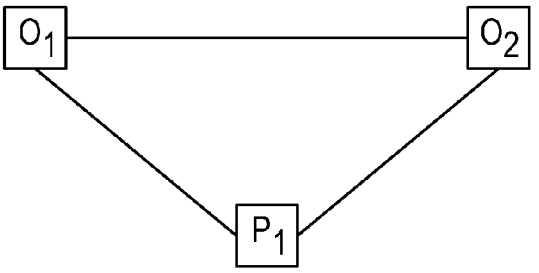

FIG. 10B

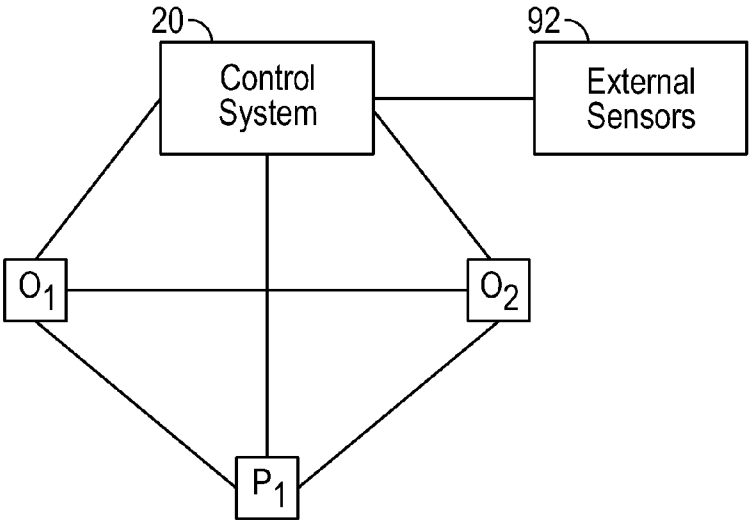

FIG. 10C

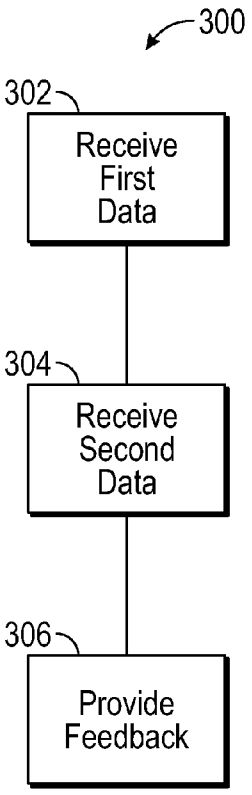
300
302
Receive First Data
304
Receive Second Data
306
Provide Feedback

FIG. 11

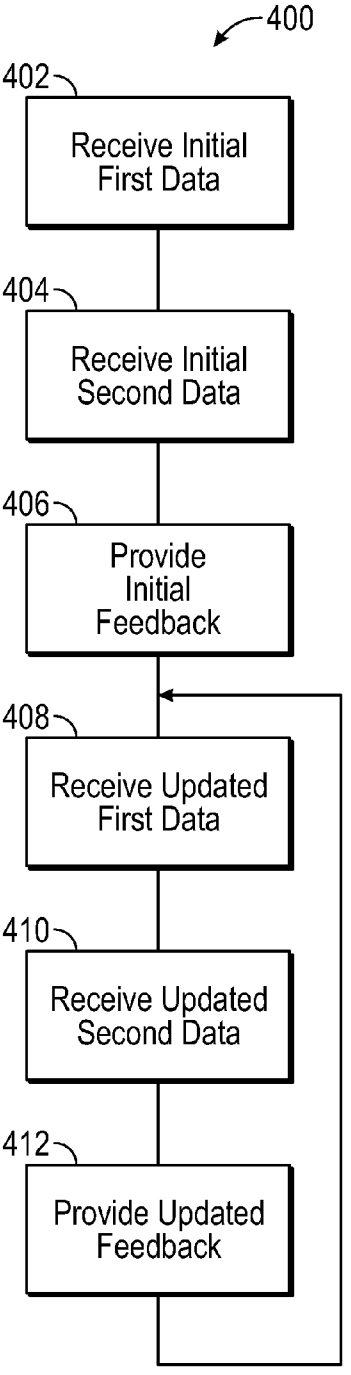
400
402
Receive Initial First Data
404
Receive Initial Second Data
406
Provide Initial Feedback
408
Receive Updated First Data
410
Receive Updated Second Data
412
Provide Updated Feedback

FIG. 12

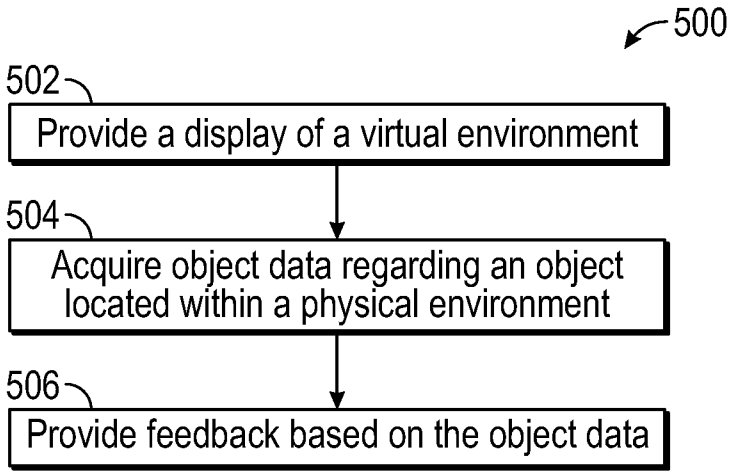

FIG. 13

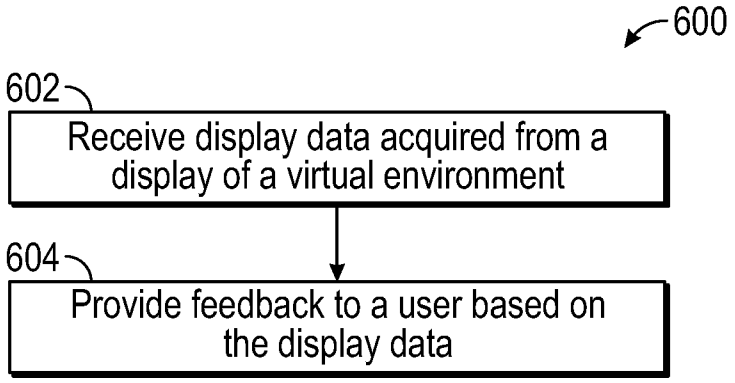

FIG. 14

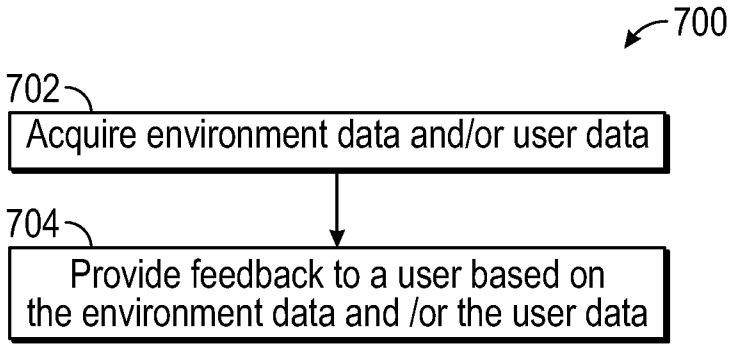

FIG. 15

GAZE AND CONDITION FEEDBACK FOR ENHANCED SITUATIONAL AWARENESS

CROSS-REFERENCE TO RELATED PATENT APPLICATIONS

[0001] This application is a continuation of U.S. patent application Ser. No. 15/004,522, filed Jan. 22, 2016. U.S. patent application Ser. No. 15/004,522 is a continuation-in-part of U.S. patent application Ser. No. 14/746,454, filed Jun. 22, 2015, which claims the benefit of U.S. Provisional Application No. 62/090,751, filed Dec. 11, 2014. U.S. patent application Ser. No. 15/004,522 also claims the benefit of U.S. Provisional Application No. 62/234,498, filed Sep. 29, 2015. All of these applications are incorporated herein by reference in their entireties.

BACKGROUND

[0002] The present disclosure relates generally to providing feedback (e.g., haptic feedback, audible feedback, visual feedback, etc.) to users. Feedback provides users with stimulation in the form of forces, vibrations, sounds, lights, or the like.

SUMMARY

[0003] One embodiment relates to an electronic game feedback system. The electronic game feedback system includes a feedback device and a processing circuit. The feedback device is configured to provide feedback to a user of an electronic game. The processing circuit is configured to control operation of the feedback device to provide the feedback to the user based on condition data regarding a condition of a primary object within a virtual environment of the electronic game. The condition includes at least one of a health level, an armor level, a shield level, and a power level of the primary object.

[0004] Another embodiment relates to a feedback system for providing feedback regarding a condition of a user. The feedback system includes a sensor and a feedback device. The sensor is configured to acquire condition data regarding the condition of the user. The feedback device is configured to provide feedback to the user based on the condition data and vary a characteristic of the feedback based on changes in the condition data. In some embodiments, the feedback device includes a wearable headgear device.

[0005] Another embodiment relates to an electronic game feedback system. The electronic game feedback system includes a feedback device and a processing circuit. The feedback device is configured to provide feedback to a user of an electronic game. The processing circuit is configured to provide a display of a virtual environment associated with a primary object controlled by the user, and control operation of the feedback device to provide the feedback to the user based on gaze data regarding a gaze of a secondary object of the electronic game. The gaze data includes an indication of a gaze direction of the gaze of the secondary object relative to the primary object.

[0006] Another embodiment relates to a feedback system. The feedback system includes a feedback device, a sensor system, and a processing circuit. The feedback device is configured to provide feedback to a first person. The sensor system configured to acquire gaze data regarding a second person. The gaze data includes at least an indication of a gaze direction of a gaze of the second person relative to the first person. The processing circuit is configured to control operation of the feedback device to provide the feedback to the first person based on the gaze data.

[0007] Another embodiment relates to a method for providing feedback to a user of an electronic game. The method includes receiving, by a processing circuit, condition data regarding a condition of a primary object within a virtual environment of the electronic game; and controlling, by the processing circuit, operation of a feedback device to provide feedback to the user of the electronic game based on the condition data. The condition includes at least one of a health level, an armor level, a shield level, and a power level of the primary object.

[0008] Another embodiment relates to a method for providing feedback to a user regarding a condition of the user. The method includes acquiring, by a sensor, condition data regarding the condition of the user; and providing, by a feedback device, feedback to the user based on the condition data, the feedback device configured to vary a characteristic of the feedback based on changes in the condition data. In some embodiments, the feedback device includes a wearable headgear device.

[0009] Another embodiment relates to a method for providing feedback to a user of an electronic game. The method includes providing, by a processing circuit via a display device, a display of a virtual environment associated with a primary object controlled by the user; receiving, by the processing circuit, gaze data regarding a gaze of a secondary object of the electronic game, the gaze data including an indication of a gaze direction of the gaze of the secondary object relative to the primary object; and controlling, by the processing circuit, operation of a feedback device to provide feedback to the user of the electronic game based on the gaze data.

[0010] Another embodiment relates to a method for providing feedback to a user. The method includes providing a sensor system to monitor a first person and a second person; acquiring, by the sensor system, gaze data regarding the second person, the gaze data including at least an indication of a gaze direction of a gaze of the second person relative to the first person; and controlling, by a processing circuit, operation of a feedback device to provide feedback to the first person based on the gaze data.

[0011] The foregoing summary is illustrative only and is not intended to be in any way limiting. In addition to the illustrative aspects, embodiments, and features described above, further aspects, embodiments, and features will become apparent by reference to the drawings and the following detailed description.

BRIEF DESCRIPTION OF THE DRAWINGS

[0012] FIG. **1** is a schematic block diagram of a feedback system, according to one embodiment.

[0013] FIG. **2**A is an illustration of a wearable headwear feedback device worn by a user of a feedback system, according to one embodiment.

[0014] FIG. **2**B is an illustration of a wearable band feedback device worn by a user of a feedback system, according to one embodiment.

[0015] FIG. **2**C is an illustration of a wearable clothing feedback device worn by a user of a feedback system, according to one embodiment.

[0016] FIG. **3**A is an illustration of a stationary display device used with a feedback system, according to one embodiment.

[0017] FIG. **3**B is an illustration of a wearable display device used with a feedback system, according to one embodiment.

[0018] FIG. **3**C is an illustration of a portable display device used with a feedback system, according to one embodiment.

[0019] FIG. **3**D is an illustration of a wearable display device with a portable device used with a feedback system, according to one embodiment.

[0020] FIG. **4**A is an illustration of a hand-held input device used with a feedback system, according to one embodiment.

[0021] FIG. **4**B is an illustration of a voice recognition device used with a feedback system, according to one embodiment.

[0022] FIG. **4**C is an illustration of a touch sensitive input device used with a feedback system, according to one embodiment.

[0023] FIG. **5** is a schematic illustration of a primary object in a surrounding virtual environment displayed on a display device, according to one embodiment.

[0024] FIG. **6** is an illustration of an electronic device acquiring information from a virtual display of a display device, according to one embodiment.

[0025] FIGS. **7**A-**7**B are illustrations of a user of a feedback system in a physical environment and a corresponding virtual environment displayed by a display device of the feedback system, according to one embodiment.

[0026] FIG. **8** is a schematic illustration of a user of a feedback system in a physical environment/area, according to one embodiment.

[0027] FIG. **9** is an illustration of a user of a haptic system, according to one embodiment.

[0028] FIG. **10**A is a block diagram illustrating communication from users to a control system of a feedback system, according to one embodiment.

[0029] FIG. **10**B is a block diagram illustrating communication between users of a feedback system, according to one embodiment.

[0030] FIG. **10**C is a block diagram illustrating communication between users and a control system of a feedback system, according to one embodiment.

[0031] FIG. **11** is a block diagram of a method for providing feedback to a user of a feedback system, according to one embodiment.

[0032] FIG. **12** is a block diagram of a method for providing continual feedback to a user of a feedback system, according to one embodiment.

[0033] FIG. **13** is a block diagram of a method for providing feedback to a user of a feedback system, according to another embodiment.

[0034] FIG. **14** is a block diagram of a method for providing feedback to a user of a feedback system, according to yet another embodiment.

[0035] FIG. **15** is a block diagram of a method for providing feedback to a user of a feedback system, according to still another embodiment.

DETAILED DESCRIPTION

[0036] In the following detailed description, reference is made to the accompanying drawings, which form a part thereof. In the drawings, similar symbols typically identify similar components, unless context dictates otherwise. The illustrative embodiments described in the detailed description, drawings, and claims are not meant to be limiting. Other embodiments may be utilized, and other changes may be made, without departing from the spirit or scope of the subject matter presented here.

[0037] Referring to the figures generally, various embodiments disclosed herein relate to a feedback system (e.g., a haptic feedback system, an audible/visual feedback system, combinations thereof, etc.) intended to enhance the situational awareness of a user in a given situation (e.g., in an electronic game, in a real-world application, a combination of being in a physical environment while immersed in a virtual environment, etc.). When a threat or other object (e.g., an opponent, an enemy, a danger zone, etc.) is looking at (e.g., gazing, etc.), within the proximity of, and/or obstructing movement of a user (or virtual character) of the feedback system, feedback (e.g., haptic feedback, audible feedback, visual feedback, etc.) may be provided to the user to make him/her aware of objects not in his/her field of view, other people or virtual characters gazing in his/her direction, and/or to identify an object in the user's proximity as a threat or hazard. Ideally, the feedback becomes second nature to the user of the feedback system such that he/she develops an intuitive sense of the surroundings and/or a virtual environment. The feedback may be haptic, audible, visual, or combinations thereof, among other possibilities.

[0038] For example, electronic game players are not always aware of objects, other players, and/or threats within an electronic game, due to limitations of field of vision, distractions, skill, etc. The systems disclosed herein in accordance with various embodiments provide players with feedback regarding a primary object (e.g., a character used by the electronic game player, a vehicle driven by the electronic game player, etc.) and a secondary object (e.g., other virtual characters, vehicles, dangers, remote from the primary object, a distal object, etc.). The feedback may be generated based on various data regarding the primary object, secondary objects, a surrounding virtual environment, etc., and may be provided so as to provide an indication of a directness of a gaze, a virtual distance, a virtual direction, an affiliation, a threat level (or nature or type of the secondary object), a relative velocity, an absolute velocity, a relative acceleration, an absolute acceleration, and the like between the primary object and the secondary object. The feedback may also provide a user of the virtual character with an indication of a condition (e.g., health, armor level, etc.) of the virtual character and/or the user themselves (e.g., heart rate, breathing patterns, etc.). The feedback system may also be configured to provide a user immersed within a virtual environment an indication of a physical environment surrounding the user that is at least partially obstructed by a display device (e.g., virtual reality glasses, etc.) of the feedback system.

[0039] Similarly, users may likewise use the systems disclosed herein for real-world applications such as driving, treatment for sight or hearing-impaired persons, aviation, sports, combat, construction, etc. For example, a paintball player may not always recognize/see other players of an opposing team or may have an opposing player sneak up from a side or rearward position. The systems disclosed herein in accordance with various embodiments are configured to provide a user of the feedback system with feedback

(e.g., haptic feedback, audible feedback, visual feedback, etc.), thereby increasing the user's awareness of potential threats or other information that may be conveyed through audible, tactile, and/or visual stimulation. In another example, a construction worker may be working in a potentially hazardous area (e.g., on a construction site with a ledge, etc.) or a factory worker may be warned about staying away from dangers within a factory (e.g., near rotating/moving equipment or hot surfaces, etc.). The feedback system may provide feedback to the user such that they have a "6th sense," leading to an intuitive understanding of his/her surrounding to facilitate avoiding dangerous areas and/or materials.

Electronic Game Feedback System

[0040] According to the example embodiment shown in FIGS. **1**-7B, feedback system **10** (e.g., situational awareness system, etc.) is configured as an electronic game feedback system. In one embodiment, feedback system **10** is configured to provide feedback to a user playing an electronic game (e.g., a first person shooter game, a racing game, a fighting game, a console game, a computer game, a mobile game, etc.). In other embodiments, feedback system **10** is configured to provide feedback during real-world applications (e.g., physical activity, construction, etc.). As shown in FIG. **1**, feedback system **10** includes control system **20**, display device **70**, input device **80**, sensor system **90**, and feedback device **100**.

[0041] In general terms, control system **20** is configured to provide a display (e.g., a virtual environment, a primary object, distal secondary objects, etc.) to a user playing an electronic game. Control system **20** receives various types of data regarding users of feedback system **10**, a primary object (e.g., a virtual character, a virtual vehicle, etc.), a surrounding physical environment, a virtual environment, distal secondary objects (e.g., threats, other players, other virtual characters, remote objects, inanimate objects, etc.), etc. Using the data, control system **20** controls the operation of feedback device **100** to provide feedback to a user based on the data. In one embodiment, control system **20** is configured to be used with or installed within a game console. In some embodiments, control system **20** is configured to be used with or installed within virtual reality glasses. In other embodiments, control system **20** is configured to be used with or installed within a desktop computer, a laptop, a smartphone, a tablet, or other suitable platform used to operate and/or be used with an electronic game. In some embodiments, control system **20** is configured to be used with a combination of a game console and a portable device (e.g., smartphone, tablet, laptop, camera device, etc.).

[0042] As shown in FIG. **1**, control system **20** includes processing circuit **30**, display module **40**, sensor module **50**, and feedback module **60**. In one embodiment, processing circuit **30** is in data communication with at least one of display module **40**, sensor module **50**, and feedback module **60** such that data may be transferred between the modules of control system **20** and processing circuit **30**.

[0043] As shown in FIG. **1**, processing circuit **30** includes processor **36** and a memory **38**. Processor **36** may be implemented as a general-purpose processor, an application specific integrated circuit (ASIC), one or more field programmable gate arrays (FPGAs), a digital-signal-processor (DSP), a group of processing components, or other suitable electronic processing components. Memory **38** is one or more devices (e.g., RAM, ROM, Flash Memory, hard disk storage, etc.) for storing data and/or computer code for facilitating the various processes described herein. Memory **38** may be or include non-transient volatile memory or non-volatile memory. Memory **38** may include database components, object code components, script components, or any other type of information structure for supporting the various activities and information structures described herein. Memory **38** may be communicably connected to processor **36** and provide computer code or instructions to processor **36** for executing the processes described herein.

[0044] According to an example embodiment, display module **40** is configured to provide a display to display device **70** associated with an electronic game. Display device **70** is configured to provide the display of the electronic game to a user of feedback system **10**. In one embodiment, the display includes a primary object (e.g., a virtual vehicle such as a car, plane, spaceship, boat; a virtual character such as an athlete, a soldier, a ninj a; etc.) chosen by the user and a virtual environment (e.g., race track, athletic field, war zone, outer space, etc.) around the primary object. In some embodiments, the display further includes a secondary object (e.g., a virtual character controlled by another user, a virtual character controlled by control system **20**, etc.). In some embodiments, the secondary object is an inanimate object within an electronic game (e.g., a ball, a missile, a bullet, a meteor, a boulder, a vehicle, etc.). In other embodiments, the secondary object is an inanimate object that provides an indication of a physical object within the physical environment surrounding the user of feedback system **10**.

[0045] As shown in FIG. **3**A, in one embodiment, display device **70** includes a stationary display device, shown as television **72**. By way of example, television **72** may be any type of television, screen, touchscreen, or monitor (e.g., LCD, LED, etc.) configured to provide the display of the electronic game to a user. In another embodiment, display device **70** includes a projectable display device such as a video projector with a screen, a portable device with projection capabilities, and the like. As shown in FIG. **3**B, in other embodiments, display device **70** includes a wearable display device, shown as virtual reality (VR) glasses **74**, configured to be worn over the eyes of a user and provide the display of the electronic game to the user. In an alternative embodiment, the wearable display device is configured to display an augmented reality (AR) display to a user. Thus, the wearable display device may at least partially obstruct the user's view of the surrounding physical environment. VR glasses **74** may include various sensors configured to track movement of the user (e.g., orientation, acceleration, speed, etc.) to correspond with movement and/or actions taken by a virtual character within a virtual environment of the electronic game, as well as adjust the display (e.g., based on head orientation, etc.). The various sensors of VR glasses **74** may include a still camera, a video camera, a gyroscope, an accelerometer, a compass, a proximity sensor, a radar, a lidar, and/or still other sensors.

[0046] As shown in FIG. **3**C, in other embodiments, display device **70** includes a portable electronic device, shown as portable device **76**, configured to provide the display of the electronic game to a user. Portable device **76** may include, but is not limited to, a smartphone, a tablet, a laptop, a portable game console, a camera device, or still

another portable electronic device (e.g., configured to provide the display of the electronic game to a user, etc.).

[0047] As shown in FIG. **3**D, in other embodiments, display device **70** includes VR glasses **74** having a slot or other retaining mechanism (e.g., clip, intermediate coupling device, etc.), shown as portable device retainer **78**. Portable device retainer **78** may be configured to receive and hold portable device **76** to and/or within VR glasses **74**. As shown in FIG. **3**D, portable device **76** may include one or more sensors, shown as portable device sensors **96**. Portable device sensors **96** may include a still camera, a video camera, a gyroscope, an accelerometer, a compass, a proximity sensor, a radar, a lidar, and/or still other sensors. In one embodiment, portable device **76** provides the display of the electronic game to a wearer of VR glasses **74**. In other embodiments, VR glasses **74** provides the display of the electronic game to a wearer of VR glasses **74**, while portable device **76** acquires various information and/or data (e.g., regarding a surrounding environment such as obstacles like furniture, stairs, etc.; regarding movement of the user such as orientation, acceleration, speed, etc.; etc.) with the portable device sensors **96** (e.g., VR glasses **74** may not need some or all of the sensors, reducing the cost thereof, etc.). In still other embodiments, portable device **76** acquires information and/or data regarding the environment and movement of the user with portable device sensors **96** and provides the display of the virtual environment to the user based on the acquired data. Thus, portable device **76** may enable a user of an electronic game to acquire various data for feedback purposes (e.g., haptic, audible, visual, etc.) without requiring the purchase of additional hardware components (e.g., the user may utilize commonly owned camera enabled portable electronic devices such as a personal smartphone, etc.) or expensive VR glasses (e.g., just need glasses that hold portable device **76**, etc.).

[0048] Referring back to FIG. **1**, sensor module **50** is configured to receive data regarding the primary object and the secondary object of the electronic game, according to an example embodiment. The data regarding the primary object (e.g., first data, positional data, condition data, etc.) may include an indication of a head orientation/direction of travel of the primary object (e.g., a direction in which a virtual character is looking and therefore what the user sees on display device **70**, a direction in which a vehicle is traveling, etc.), a location of the primary object in the virtual environment, movement of the primary object (e.g., velocity, acceleration, etc.), an attribute and/or condition of the primary object (e.g., a weapon, a shield, an offensive capability, a defensive capability, a health, an experience level, a skill level, a strength, a speed, a sensory capability, an agility, etc.), and/or other data regarding the primary object. The data regarding the secondary object (e.g., second data, threat data, gaze data, etc.) may include an indication of at least one of an affiliation of the secondary object (e.g., opponent, enemy, team member, etc.), a virtual distance to the secondary object (e.g., relative to the location of the primary object, etc.), a threat level/nature of the secondary object (e.g., high threat, low threat, no threat, etc.), an attribute of the secondary object (e.g., a weapon, a shield, an offensive capability, a defensive capability, a health, an experience level, a skill level, a strength, a speed, a sensory capability, an agility, etc.), a location of the secondary object in the virtual environment, a direction between the primary object and the secondary object, a directness of a gaze of the secondary object onto the primary object, an orientation of the secondary object, movement of the secondary object, a velocity of the secondary object (e.g., relative velocity, absolute velocity, etc.), an acceleration of the secondary object (e.g., relative acceleration, absolute acceleration, etc.), and/or still other indications.

[0049] In one embodiment, sensor module **50** is further configured to receive event data regarding the electronic game. The event data may include data regarding a setting and/or a condition within the electronic game, such as a change in the level within the game, a change in a situation within the game, performance of the user in the game, an attribute of the primary object, an attribute of the secondary object, a current virtual environment of the game, performance of other users in the game, a difficulty setting of the game, and/or other data.

[0050] In some embodiments, sensor system **90** is configured to acquire and provide user data regarding the user of the primary object to sensor module **50**. Sensor system **90** may communicate with sensor module **50** in a variety of ways, using any suitable wired and/or wireless communications protocols. According to an example embodiment, sensor system **90** includes a sensor, such as a camera, motion sensor, and/or another device, configured to acquire the user data. In one embodiment, sensor system **90** includes an external sensor system (e.g., located remote from the user, etc.). In other embodiments, sensor system **90** includes a wearable sensor system. The user data may include data regarding an orientation and a movement of at least one of a head, a torso, an arm, and a leg of the user. In one embodiment, the first data of the primary object is based on the user data. For example, the orientation and the movement of the user may be used to control the orientation and movement of a virtual character in a virtual environment.

[0051] In some embodiments, sensor system **90** is further configured to acquire and provide object data regarding a physical object (e.g., a wall, a piece of furniture, etc.) located within the physical environment surrounding the user of feedback system **10** to sensor module **50**. The object data may include data regarding a position, a size, a proximity/distance, and/or a velocity of the physical object relative to the user of feedback system **10**. Sensor system **90** may include a sensor, such as a camera, radar, an infrared sensor, a capacitive sensor, and/or an ultrasonic sensor, to acquire the object data regarding physical objects around the user. In one embodiment, sensor system **90** is configured to dynamically acquire the object data in real time. In some embodiments, sensor system **90** is configured to scan the physical environment (e.g., room, etc.) to pre-register the location and characteristics (e.g., size, etc.) of the physical objects. In this instance, sensor module **50** may be configured to implement dead reckoning techniques using accelerometers of sensor system **90**. Thus, sensor module **50** may use the pre-registration of the physical environment, along with registering the starting point of the user within the physical environment, to determine the location and/or velocity of the user relative to the physical objects in the surrounding environment. In some embodiments, the user may be able to indicate certain areas of the surrounding environment in which he/she would like to avoid while using feedback system **10** (e.g., areas with fragile objects such as paintings or china; areas with potential hazardous or dangerous items such as stairs or sharp objects; etc.).

[0052] In some embodiments, sensor system **90** is further configured to acquire and provide condition data regarding a condition of the user of feedback system **10** to sensor module **50**. The condition data may include data regarding the condition of the user such as heart rate, breathing patterns, temperature, sleeplessness/alertness, time of game play, SpO_2 levels, glucose levels, hydration levels, and/or other conditions that may be affected by extended or intense game play. Sensor system **90** may include one or more sensors, such as a heart rate sensor, a temperature sensor, a timer, a respiratory or breathing sensor, and/or still other sensors, to acquire the condition data regarding conditions of the user.

[0053] In some embodiments, sensor system **90** is further configured to acquire and provide display data regarding a virtual environment currently being displayed by display device **70** to sensor module **50**. The display data may include data regarding the current location of the primary object (e.g., within a map, a virtual world, etc.), the current location of surrounding virtual objects (e.g., secondary object, opponents, houses, buildings, vehicles, geographical landscapes, etc.), a direction of travel (e.g., of the primary object, of the secondary object(s), etc.), a rate of travel (e.g., velocity, acceleration, etc. of primary and/or secondary objects, etc.), range/distance information, bearing information, affiliation information, threat level information, attribute information, etc. The display data may be directly acquired by sensor module **50** and/or acquire by sensor system **90**. Sensor system **90** may include a camera device and/or a camera enabled device (e.g., a portable electronic device, etc.) to acquire the display data.

[0054] Referring still to FIG. **1**, input device **80** is configured to receive an input from the user during the electronic game. The first data (e.g., movement, actions, etc.) of the primary object is based on the input from input device **80**, according to an example embodiment. By way of example, input device **80** may be configured to receive at least one of touch inputs, audible inputs, and motion inputs provided though the movement of input device **80** such that a virtual character performs some action (e.g., moves, turns, shoots, etc.).

[0055] As shown in FIGS. **4**A-**4**C, input device **80** may include a variety of input devices. As shown in FIG. **4**A, input device **80** may include or be a hand-held input device, shown as controller **82**. In one embodiment, controller **82** is configured to receive touch inputs in the form of button commands. Additionally or alternatively, controller **82** is configured to receive motion inputs through the user repositioning the controller **82** (e.g., a throwing motion, a punching motion, etc.). As shown in FIG. **4**B, input device **80** may include or be a voice recognition device (e.g., a headset/microphone device, etc.), shown as headset **84**. Headset **84** may be configured to receive voice commands (e.g., audible inputs, etc.) from the user. As shown in FIG. **4**C, input device **80** may include or be a touch sensitive input device, shown as touch sensitive device **86**. As shown in FIG. **4**C, touch sensitive device **86** is hemispheric in shape. In other embodiments, touch sensitive device **86** is another shape (e.g., a touchscreen, etc.). A user of feedback system **10** may provide touch inputs to the exterior of the touch sensitive device **86** for providing input to control the primary object. In some embodiments, touch sensitive device **86** is configured to provide feedback to a user of feedback system **10**. For example, portions of the exterior of touch sensitive device may vibrate or illuminate to provide a user with an enhanced awareness of the virtual environment. In another embodiment, input device **80** includes a wearable input device configured to receive motion inputs from the movement of the user and/or touch inputs. In yet another embodiment, the input is provided by movements of the user of feedback system **10** (e.g., monitored by sensor system **90**, etc.). In some embodiments, input device **80** and feedback device **100** are included in a single device.

[0056] Processing circuit **30** is configured to control operation of feedback device **100** via feedback module **60** based on the data (e.g., first data, second data, event data, user data, gaze data, object data, condition data, display data, etc.) received by sensor module **50**. As shown in FIGS. **2**A-**2**C, feedback device **100** may include a variety of wearable feedback devices. The wearable feedback devices include a plurality of feedback elements, shown as elements **102**. In one embodiment, elements **102** are configured to provide haptic feedback, visual feedback, and/or audible feedback to the user such that a user has an enhanced situational awareness. In some embodiments, the display device **70** (e.g., VR glasses **74**, television **72**, etc.) may additionally or alternatively provide haptic, audible, and/or visual feedback to the user. Referring to FIG. **2**A, in one embodiment, feedback device **100** includes a wearable headgear device (e.g., helmet, hat, visor, etc.), shown as headgear **104**, configured to rest on the head of the user of feedback system **10**. As shown in FIG. **2**A, headgear **104** includes a plurality of elements **102** disposed about headgear **104**. In one embodiment, the plurality of elements **102** are equally spaced about headgear **104**. In other embodiments, the plurality of elements **102** are selectively positioned around headgear **104** so as to correspond in location to desired anatomical features (e.g., ears, temple, forehead, nape, crown, etc.) of the user. The size of headgear **104** may be varied to fit various users and to accommodate various types of elements **102** (e.g., haptic, visual, audible, etc.).

[0057] Referring now to FIG. **2**B, feedback device **100** includes a band, shown as band **106**, in some embodiments. Band **106** may include one or more elements **102**. In one embodiment, band **106** includes a single element **102**. In other embodiments, band **106** includes a plurality of elements **102**. In one embodiment, elements **102** are equally spaced about band **106**. In other embodiments, elements **102** are selectively positioned along band **106** so as to correspond in location to desired parts of a user's body (e.g., an ear or temple area of the head, a wrist, etc.). The size of band **106** may be varied to fit various users or body parts (e.g., a head, a wrist, an ankle, a waist, etc.) and/or to accommodate various types of elements **102**. In one embodiment, band **106** is a head band. In other embodiments, band **106** may be a wrist band (e.g., a watch, a bracelet, etc.), an ankle band, an arm band, a leg band, a torso band (e.g., a belt, etc.), or a band to extend about another portion of a user's body.

[0058] Referring to FIG. **2**C, in other embodiments, feedback device **100** includes an article of clothing, shown as article of clothing **108**. As shown in FIG. **2**C, article of clothing **108** is a shirt. In other embodiments, article of clothing **108** may be pants, a vest, a jacket, shorts, a sock, a shoe, or a glove. In one embodiment, the plurality of elements **102** are equally spaced about article of clothing **108**. In other embodiments, the plurality of elements **102** are selectively positioned around article of clothing **108** so as to correspond in location to desired anatomical features (e.g.,

chest, back, etc.) of the user. The size of article of clothing **108** may be varied to fit various users and to accommodate various types of elements **102**. In further embodiments, feedback device **100** includes a combination of articles of clothing **108**, including a shirt, pants, a sock, a shoe, and/or a glove. In yet further embodiments, feedback device **100** includes a combination of devices, including headgear **104**, one or more bands **106**, one or more articles of clothing **108**, display device **70** (e.g., television **72**, VR glasses **74**, portable device **76**, etc.), and/or input device **80** (e.g., controller **82**, headset **84**, touch sensitive device **86**, etc.).

[0059] According to an example embodiment, elements **102** may be or include a vibratory element configured to provide haptic feedback (e.g., vibrations, mechanical stimulations, etc.) to a user regarding a secondary object (e.g., a gaze, a proximity, a threat level, etc. of another virtual character, etc.), an event within the electronic game, a physical object near the user of feedback device **100**, and/or a condition of the user's virtual character and/or the user. For example, element **102** in some embodiments is or includes a vibration device or similar component configured to provide tactile feedback (e.g., haptic feedback, vibrations, etc.) to a user regarding a secondary object, an event within the electronic game, a physical object near the user of feedback device **100**, and/or a condition of the user's virtual character and/or the user. The frequency, amplitude, waveform, and/or other characteristics of vibrations of elements **102** may be varied to provide indications of direction, relative position, relative velocity, absolute velocity, relative acceleration, absolute acceleration, affiliation, threat level, nature, a condition change, an event, an object warning, and the like to the user.

[0060] In some embodiments, feedback device **100** includes an audible element such as a speaker (e.g., external speaker, head phones, ear buds, etc.) configured to provide audible feedback (e.g., an audible warning or notification, etc.) to a user regarding a secondary object, an event within the electronic game, a physical object near the user of feedback device **100**, and/or a condition of the user's virtual character and/or the user. The speaker may be implemented in any suitable location, and any suitable number of speakers may be utilized. In some embodiments, multiple speakers may be utilized. The speakers may be worn on or within one or both ears of a user, or externally located from the user or feedback device **100** (e.g., television speakers, stereo system speakers, etc.). In one embodiment, the speakers are stereophonic such that a stereophonic warning is provided to users by way of feedback device **100**. While in some embodiments the speakers are worn by a user (e.g., on an ear, etc.), in other embodiments, the speakers are carried by another piece of equipment, such as headgear **104**, a vehicle, portable device **76**, television **72**, etc. The pitch, volume, tone, frequency, and/or other characteristics of an audible warning/notification may be varied to provide indications of direction, relative position, relative velocity, absolute velocity, relative acceleration, absolute acceleration, affiliation, threat level, nature, a condition change, an event, an object warning, and the like to the user.

[0061] In some embodiments, feedback device **100** includes visual elements such as one or more lights or displays configured to provide visual warnings or notifications to a user regarding a secondary object (e.g., a gaze, a proximity, a threat level, etc. of another virtual character, etc.), an event within the electronic game, a physical object near the user of feedback device **100**, and/or a condition of the user's virtual character and/or the user For example, one or more lights (e.g., LEDs, etc.) may be provided within headgear **104** (e.g., to the peripheral side of each eye, etc.). A brightness, a color, a blinking frequency, or other characteristic of the light may be varied to provide indications of direction, relative position, relative velocity, absolute velocity, relative acceleration, absolute acceleration, affiliation, threat level, nature, a condition change, an event, an object warning, and the like to the user. In some embodiments, feedback device **100** includes a combination of feedback elements, including one or more of haptic, audible, visual, and the like.

[0062] Feedback device **100** may provide a user of feedback system **10** with enhanced awareness of his/her virtual surroundings such that he/she may provide an input to input device **80** that corresponds with the feedback. For example, the user may provide a touch input and/or motion input to controller **82** to move a virtual character a certain direction, perform a specific task, or the like based on the feedback received. By way of another example, the user may provide a voice command to headset **84** to control the actions of the primary object, provide team members with information regarding enemies (e.g., players on another team, etc.) based on the feedback, and the like based on the received feedback from feedback device **100**. By way of yet another example, the user may provide touch sensitive inputs to touch sensitive device **86**. The relative locations of touch sensitive device **86** may substantially correspond to the feedback provided by feedback device **100**. For example, the user may feel a vibratory sensation on the back of his/her head from headgear **104**. The user may associate the location of the haptic feedback on their head to the near side (i.e., the side closest to the user, etc.) of touch sensitive device **86**. By touching the corresponding location on touch sensitive device **86**, the virtual character may move accordingly. For example, the virtual character may turn towards the inputted direction, begin moving in the inputted direction, or start shooting in the inputted direction, among other alternatives. By way of still another example, feedback device **100** may provide a user of feedback system **10** with enhanced awareness of his/her physical surroundings such that he/she may avoid walking into objects in the physical environment (e.g., when using VR glasses **74**, etc.).

[0063] In some embodiments, feedback device **100**, sensor system **90**, input device **80**, and/or display device **70** are provided by a single device such that the single device provides both input to processing circuit **30** (e.g., to control the virtual character, etc.) and output/feedback to the user (e.g., to provide enhanced situational awareness, etc.). For example, touch sensitive device **86** may be integrated into headgear **104** such that a user may provide a touch input directly in the location the feedback is experienced. By way of example, if haptic feedback is provided to the temple of the user (e.g., indicating an enemy to their side, etc.), the user may touch the temple location on their head, and touch sensitive device **86** may take appropriate action (e.g., turn in the direction of the touch input, etc.). In some embodiments, feedback devices **100** such as headgear **104**, band(s) **106**, and/or article(s) of clothing **108** are configured to provide input to feedback system **10** through motion/movement of the user. By way of example, feedback device **100** may include motion sensors that track the movement of a portion of the user (e.g., an arm, a leg, etc.). For example, a user may

turn his/her head and headgear **104** may track the motion and provide input such that the virtual character turns or looks accordingly. By way of another example, the user may be wearing bands **106** on his/her wrists such that bands **106** provide input regarding the location of the virtual characters hands/arms based on the movement of the users hands/arms (e.g., such as the motion of the user's arm when throwing a punch in a fighting game, etc.). In some embodiments, sensor system **90** (e.g., via a camera system, etc.), display device **70** (e.g., portable device **76**, VR glasses **74**, etc.), and/or feedback device **100** (e.g., headgear **104**, bands **106**, clothing **108**, etc.) track the movement of the user. Feedback system **10** may then compare the motion data gathered by sensor system **90**, display device **70**, and/or feedback device **100** to provide a more accurate input to control movements and actions of the primary object.

Feedback Regarding a Virtual Character

[0064] Referring now to FIG. **5**, in some embodiments, elements **102** are configured to be selectively and dynamically activated and deactivated based on an orientation of the head of the primary object (e.g., P_1, etc.) relative to the secondary object(s) (e.g., O_1, O_2, etc.). As shown in FIG. **5**, secondary objects O_1 and O_2 are in close proximity (e.g., pose a possible threat, etc.) to primary object P_1 within virtual environment **110**, while secondary object O_3 is not within close proximity (e.g., does not pose a threat, substantially far from primary object P_1, etc.). In one embodiment, feedback device **100** provides the user with feedback such that the user has a heightened awareness of the secondary objects and/or threats outside of his/her field of view. For example, as shown in FIG. **5**, secondary object O_2 is not within the field of view of primary object P_1 such that user is not able to see secondary object O_2 on display device **70**. In other embodiments, feedback device **100** further provides the user with feedback for secondary objects within the user's field of view to reinforce the intuitive understanding of what each vibration (or other feedback signal such as audible or visual) represents as described more fully herein. For example, as shown in FIG. **5**, secondary object O_1 is within the field of view of primary object P_1 such that user is able to see secondary object O_1 on display device **70**. In one embodiment, feedback device **100** provides the user with feedback when the primary object P_1 and a secondary object are not in contact. In some embodiments, feedback device **100** also provides the user with feedback when the primary object P_1 and a secondary object are in contact (e.g., a punch or kick hitting the primary object, etc.).

[0065] Referring again to FIG. **5**, in some embodiments, elements **102** are configured to be selectively and/or dynamically activated and deactivated by control system **20** based on gaze data of a secondary object (e.g., O_1, O_2, O_3, etc.) of an electronic game. The gaze data may include an indication of a gaze direction of a second virtual character relative to a primary object (e.g., P_1, etc.). The gaze data may provide an indication to the position and view angle of the secondary objects. The position of a virtual character may be defined by a global coordinate system such as a Cartesian coordinate system (e.g., X position, Y position, Z position, etc.) within virtual environment **110**. The view angle of a virtual character may be defined based on the pitch, yaw, and roll of the line of sight of the virtual character, i.e., the deviation of the virtual character's line of sight from "zero" (i.e., straight ahead). Thus, based on the position of the primary object P_1 (e.g., X, Y, Z coordinates, etc.), and the position and view angle of the secondary object(s) (e.g., O_1, O_2, O_3, etc.), control system **20** may determine whether the primary Object P_1 is in or substantially near being within the line of sight of one or more secondary objects.

[0066] In one embodiment, feedback device **100** provides the user with feedback such that the user has a heightened awareness of the secondary objects and/or threats that are looking at and/or within a certain distance of the primary object. For example, as shown in FIG. **5**, secondary objects O_1 and O_2 are in close proximity (e.g., pose a possible threat, etc.) to primary object P_1 within virtual environment **110**, while secondary object O_3 is not within close proximity (e.g., does not pose a threat, substantially far from primary object P_1, etc.). Further, as shown in FIG. **5**, secondary objects O_1, O_2, and O_3 are looking in the direction of primary object P_1. In some embodiments, feedback is provided to a user of the primary object in response to a gaze of a secondary object coming within an angle threshold of the primary object. In some embodiments, the feedback regarding the gaze of a secondary object may provide information such as a distance between the primary object and the secondary object, a directness of the gaze or level of attention (e.g., incidental looking, tracking and following, locked and loaded targeting, etc.), type of secondary object looking (e.g., high threat character, low threat character, etc.), and/or the like. In one embodiment, feedback device **100** provides feedback for any secondary object looking in the direction of the primary object P_1. In some embodiments, feedback device **100** does not provide feedback to the user regarding a secondary object within the line of sight of the primary object P_1 (e.g., secondary object O_1, etc.). In other embodiments, feedback device **100** provides the user with feedback for secondary objects within the user's field of view to reinforce the intuitive understanding of what each vibration (or other feedback signal such as audible or visual) means. In some embodiments, feedback device **100** does not provide feedback to the user regarding a secondary object substantially far from the primary object P_1 (e.g., secondary object O_3, etc.).

[0067] The feedback may be binary (e.g., on or off, etc.). The feedback may be scaled based on the angle between the primary object and the line of sight of the secondary object. Thus, the feedback may indicate more urgency as the line of sight of the secondary object approaches the primary object. The feedback may also be scaled based on a distance between the primary object and the secondary object such that secondary objects closer to the primary object cause increased feedback as compared to secondary objects further from the primary object. The feedback may also vary based on the type of secondary object and/or threat level of the secondary object. The feedback may provide an indication to range and/or bearing to the secondary object through different classes of sensations, different intensities, different frequencies, and/or different pulse patterns. The feedback may also indicate the number of secondary objects looking at the primary object or a certain point or destination.

[0068] According to one embodiment, feedback device **100** provides two dimensional information (e.g., left, right, front, back, etc.) to a user regarding the position of the secondary object in relation to the primary object. For example, if the secondary object is behind the primary object (e.g., while looking at the primary object, etc.), feedback device **100** may provide haptic feedback (or another type of

feedback) via elements **102** to a rear portion of the user (e.g., back, rear of head, rear of neck, etc.) to make the user aware of the unseen secondary object behind the primary object. In other embodiments, feedback device **100** provides three dimensional information (e.g., up, down, up at an angle, etc.) to the user regarding the position of the secondary object (e.g., looking at the primary object, etc.) in relation to the primary object. For example, if the secondary object is to the side and above the primary object, feedback device **100** may provide haptic feedback via elements **102** to a side portion of the user (e.g., between the top and side of the user's head, etc.). In another example, the feedback system **10** may provide visual feedback via elements **102** by flashing a light in the users peripheral vision (e.g., on the side the secondary object is located, etc.) or emitting an audible tone in an ear corresponding to a location of the secondary object with respect to the users view of the virtual environment (e.g., emitting an audible tone in the right ear of a user when a secondary object is located somewhere on the right side of the users view of the virtual environment, etc.).

[0069] According to an example embodiment, elements **102** of feedback device **100** provide metadata denoting situations within the electronic game (e.g., not only directional information based on position and/or gaze direction, etc.). By way of example, feedback module **60** may be configured to vary the frequency, amplitude, waveform, etc. of an output (e.g., vibrations, sounds, lights, etc.) of elements **102** to provide indications of different types of information to the user regarding the primary object and/or the secondary object based on the first data, the second data, the condition data, the display data, the object data, and/or the event data. In one embodiment, elements **102** denote a change in relative position between the primary object and the secondary object. In further embodiments, the feedback is configured to provide an indication of a relative distance, a relative velocity, an absolute velocity, a relative acceleration, and/or an absolute acceleration between the primary object and the secondary object. For example, the frequency of vibratory feedback may be increased or decreased with the relative velocity of the secondary object (e.g., another user controlled character, computer controller character or object, etc.), and the amplitude of the vibratory feedback may be increased or decreased with the relative distance between or proximity of potentially threatening objects. As such, in one embodiment, as the relative velocity between the primary object and the secondary object increases and/or the distance decreases, the vibratory feedback may increase in frequency and amplitude. Conversely, should the user take action to avoid the secondary object (e.g., by slowing down, changing direction, etc.) to decrease the relative velocity between users and/or increase the distance, the vibratory warning may decrease in frequency and amplitude. The same may be true for audible and/or visual feedback.

[0070] In yet further embodiments, the feedback is configured to provide an indication of an affiliation and/or a threat level/nature of the secondary object. For example, non-threatening objects (e.g., allies, teammates, etc.) may be ignored (e.g., no feedback is provided, etc.). On the other hand, threatening objects (e.g., enemies, players on other team, opponents, etc.) may cause control system **20** to provide feedback to the user via feedback device **100**. Likewise, the feedback may vary in amplitude, frequency, waveform, etc. based on a threat intensity. For example, a high threat object (e.g., a boss character, a high skilled player, etc.) may cause a more frequent and higher amplitude vibratory, audible, and/or visual response from elements **102**. Conversely, a low threat object (e.g., low skilled player, minion, etc.) may cause a less frequent and lower amplitude vibratory, audible, and/or visual response. In some embodiments, feedback device **100** further provides the user with various intensities of feedback based on the direction between the primary object and the secondary object relative to an orientation of the primary object and/or an orientation of the secondary object. For example, a secondary object may be classified as a high threat object if the secondary object is looking at the primary object or a low threat object if the secondary object is looking away from the primary object. As another example, a secondary object may be classified as a high threat object if the primary object is not looking at the secondary object or a low threat object if the primary object is looking at the secondary object.

[0071] In some embodiments, feedback device **100** is configured to provide directional information to the user. In one embodiment, the directional information indicates a proposed direction of movement of the primary object. By way of example, in a racing game, feedback device **100** may provide directional cues to notify the user of an upcoming turn in a race track. By way of another example, feedback device **100** may provide the user with feedback to propose a direction of travel such that the user leads a virtual character along a certain path, towards a secondary object, and/or away from a threat, among other possibilities. In other embodiments, the directional information indicates a direction of virtual gravity. For example, in some games, a virtual character may become disoriented (e.g., from an explosion, etc.) and not be able to gain bearing for a certain amount of time. In this instance, feedback device **100** may provide directional cues to reorient the user of the virtual character with virtual environment **110** (e.g., such as the direction of virtual gravity, etc.). In an additional embodiment, the directional information provides an indication of a specific point or locations of interest. For example, the points may be static points such as a home base or planet, or the points may be moving such as targets (e.g., enemies, etc.) that the user may be tracking or being tracked by. The static points may be valuable during combat or other types of play to orient the user with where the user is headed or with what the user is guarding during moments of disorientation.

[0072] In some embodiments, feedback system **10** is configured to recognize boundaries within virtual environment **110** and provide feedback through feedback device **100** based on the respective boundary. For example, feedback device **100** may warn a user of an upcoming cliff or obstacle within virtual environment **110**. By way of another example, feedback device **100** may lead a user to a doorway or passage within the virtual environment. By way of yet another example, feedback device **100** may recognize and notify a user of walls or virtual boundaries (e.g., such as in dark caves, holorooms, etc.) that the user may or may not be able to see.

[0073] According to an example embodiment, elements **102** are configured to be selectively and/or dynamically activated and deactivated by control system **20** based on condition data. The condition data may provide an indication of a condition (e.g., health, power, shield, etc.) of the virtual character of a user within an electronic game. Feedback system **10** may be configured to provide an indication to the user that the health, armor, or other condition of the virtual

character is declining below a threshold value while in the virtual environment (e.g., critical health, percentage of health lost, etc.). This may substantially eliminate the need for the user to look at visual indications of these conditions on a user interface (e.g., monitor, television, etc.), which facilitates quicker and appropriate reactions. The feedback regarding the condition of the virtual character may be any of a tactile notification, a visual notification, and/or an audible notification. The tactile notification may be a throb, a buzz, a tap, and/or a pulse. The feedback may encode information about which condition of the virtual character is declining, what the current level of the condition is (e.g., critical health, etc.), and/or how much time or damage that can be inflicted before a condition reaches a critical level.

[0074] In some embodiments, feedback system **10** monitors the status of a user's team or enemy team and relays information regarding the status to each user. For example, feedback system **10** may provide feedback to a user when a player is killed via feedback device **100**. In one embodiment, feedback device **100** provides haptic feedback to inform the players of how many players are alive or dead via a number of vibrations. In other embodiments, the feedback may be an auditory message (e.g., such as "player X has been killed", "five players remain", etc.).

[0075] Parameters in which the feedback is provided to a user may be modified by at least one of the user based on preference and control system **20** based on a chosen difficulty setting (e.g., easy, medium, hard, etc.), according to an example embodiment. For example, a range (e.g., distance, etc.) in which the user is first alerted of a secondary object may be altered via a user chosen setting or predefined by the game difficulty selected by the user. Similarly, the user may choose the type of objects for which to be alerted about (e.g., enemies, friendlies, based on threat level, nature, etc.). In one embodiment, a squelch function is used to tune out (e.g., suppress, etc.) excess noise (e.g., non-threatening objects, etc.).

[0076] According to an example embodiment, elements **102** of feedback device **100** (e.g., haptic elements, visual elements, audible elements, etc.) are selectively and/or dynamically activated and deactivated by control system **20** based on conditions or settings within the game corresponding with the event data and/or actions taken by the primary and secondary object (e.g., indicated by the first data and the second data, etc.). The use and/or availability of feedback with a game may be controlled by control system **20** responsive to the event data, the first data, and/or the second data.

[0077] In some embodiments, the availability of feedback is based on the game level/situation or a change thereof. By way of example, feedback may be disabled or scrambled (e.g., false feedback provided, miscalibrated, etc.) by control system **20** during a portion of a game to increase the difficulty. By way of another example, feedback may be disabled during a situation where the primary object (e.g., virtual character) becomes disoriented (e.g., from a flash bang grenade in a war game, etc.). By way of yet another example, as the user progresses through the game and reaches new checkpoints, milestones, and/or levels, the availability of the feedback may change (e.g., decrease, increase, etc.). For example, feedback may be disabled or hindered during a portion of the game when the primary object controlled by the user is facing a boss character or a character with a feature/ability/perk to disable/hinder feedback abilities.

[0078] In some embodiments, the availability of feedback is based on a primary object's or a user's experience, performance, and/or skills. For example, a virtual character with better attributes (e.g., strength, speed, aim, etc.), perks (e.g., special weapons, powers, etc.), and/or skills than other virtual characters may not be compatible with a feedback feature. In another example, a user may be rewarded the ability to activate feedback based on a level of skill (e.g., reaching a certain rank, level, prestige, etc.). In other embodiments, the availability of feedback is based on the performance of other users or secondary objects within the game. For example, if a secondary object is outperforming the primary object, the user of the primary object may be allowed to implement feedback capabilities, while the user of the secondary object may have feedback capabilities reduced or disabled.

[0079] In some embodiments, the availability of feedback is based on a current virtual environment. By way of example, feedback may be disabled in a harsh environment of the electronic game (e.g., during a storm, in a dark cave, etc.). In additional embodiments, the availability of feedback is based on a difficulty setting of the game. By way of example, a user playing a game on a relatively easy setting may be provided substantial amounts of feedback to enhance their awareness within the game and aid in the reduction of the difficulty. While a user playing a game on a relatively difficult setting may be provided with minimal amounts of feedback or none at all to increase the difficulty.

[0080] In some embodiments, the availability of feedback is based on the purchase or acquisition of feedback within the game or from a game marketplace (e.g., an app store, etc.). For example, feedback may be treated like a special item or skill that is purchasable (e.g., via points or virtual money earned during game play, etc.) within the game to increase the awareness of the virtual character (i.e., the user of the virtual character) regarding the surrounding virtual environment and secondary objects. In another example, feedback may require an additional purchase not included with the game from a store (e.g., an electronics retail store, etc.) or online game marketplace.

[0081] In some embodiments, the availability of feedback is based on an operational mode of feedback device **100** (e.g., on, off, an active state, an inactive state, etc.). According to an example embodiment, feedback device **100** is operable in a first mode of operation (e.g., an active state, an on state, etc.) and a second mode of operation (e.g., an inactive state, a standby state, an off state, etc.). In one embodiment, the first operational mode and/or the second operational mode indicate a specified sensitivity setting for feedback device **100**. The specified sensitivity setting may be user defined or processor controlled. The specified sensitivity setting may indicate an amount of feedback output for a given input (e.g., distance based, threat based, etc.). In another embodiment, the first operational mode and/or the second operational mode indicate a specified event responsiveness for feedback device **100** (e.g., an amount of feedback for certain events or situations, etc.). In other embodiments, the first operational mode and/or the second operational mode indicate a specified feedback presentation for feedback device **100** to provide to a user (e.g., visual, audible, or tactile feedback; a frequency, amplitude, etc.). In

some embodiments, the first operational mode and/or the second operational mode indicate a specified availability for feedback device **100** to provide feedback to a user.

[0082] In one embodiment, the operational mode of feedback device **100** is controlled by a user (e.g., by pressing an on/off button, etc.). In another embodiment, the operational mode of feedback device **100** is controlled by control system **20**. Control system **20** may be configured to reconfigure feedback device **100** between the active state and the inactive state based on at least one of the event data, the first data, user data, and the second data (as described above with regards to the availability of the feedback). In one embodiment, the possession, settings, or operational mode of feedback device **100** is represented within an electronic game by a tertiary object (e.g., an item the user may pick up or obtain with the primary object, etc.). For example, control system **20** may activate feedback capabilities in response to a user obtaining a certain item (representing the activation of feedback device **100**) within a game.

[0083] In some embodiments, feedback device **100** is controlled by control system **20** to operate better (e.g., be more sensitive to surroundings, etc.) for some primary or secondary objects than others. For example, some enemies (e.g., other players, virtual characters, etc.) may not be detected as well as others, such as ninjas or leopards. In one embodiment, a user is able to purchase or acquire an invisibility/sneakiness skill or ability for a primary object such that an opponent's feedback device **100** does not notify the opponent of the user's primary object. In another embodiment, a user is able to purchase or acquire a disruption skill for a primary object such that an opponent's feedback device **100** provides false feedback (e.g., provides corrupt directional feedback, introduces fake objects, etc.) to the opponent. In still another embodiment, a user may choose to use another character's perspective (e.g., of a teammate or opponent with or without permission, etc.). For example, a user may use a teammate's virtual character's perspective to gain a greater awareness of threats ahead or in another location of the virtual environment. In some embodiments, the availability of feedback is based on any combination of the aforementioned event data and/or characteristics (e.g., a level, a situation, a difficulty setting, a current virtual environment, a performance level or characteristic of the user, a performance level or characteristic of other users, an operational mode of feedback device **100**, etc.).

[0084] According to yet another example embodiment, processing circuit **30** is configured to control the operation of elements **102** to provide a sense of at least one of a presence, a distance, and a direction of an object relative to the user of feedback device **100**. The feedback may be based on at least one of a distance of an object (e.g., secondary object, another person, etc.) relative to the user (or primary object), a direction of the object relative to the user, a nature/threat level of the object, and a user response to previously-provided feedback. The feedback provided by elements **102** may include, but are not limited to, a vibration, a stroke or swipe, an acoustic stimulation, a visual stimulation, a temperature change, a moisture change, a lubrication, and/or an electrical stimulation. The vibration may be provided by a vibratory element. The stroke or swipe may be provided by a plurality of vibratory elements actuated in succession, simultaneously, and/or in a specific pattern (e.g., the vibratory elements are arranged in a linear pattern such that each may provide vibratory feedback to a user along the pattern, etc.). The temperature change may be provided by a heating/cooling element (e.g., a resistive heating element, a heating element that utilizes a chemical reaction, a fan, etc.). The moisture or lubrication may be provided by a nozzle attached to a fluid reservoir (e.g., a water tank, etc.) or a humidifying material or device. The electrical stimulation may be provided by a device configured to provide electrical impulses (e.g., electrical muscle stimulation, etc.).

[0085] In one embodiment, the feedback is derived from, modulated by, and/or accompanied by audio information. By way of example, using audio information, feedback device **100** may provide a user with feedback derived from the audio information indicating where a sound is coming from. By way of another example, in a situation where music within an electronic game changes, processing circuit **30** may modulate the feedback based on the music. For example, a change in the background music may indicate an intense or more difficult portion of the electronic game is occurring, where processing circuit **30** may adjust the feedback based on the situation. By way of yet another example, the feedback may be provided in the form of or accompanied by an audio output (e.g., audible feedback, from a speaker, etc.), as described above. The audio information may include a musical score, a tone, a notification, etc. In another embodiment, the feedback is accompanied by visual information supplied to the user of feedback system **10** or visual information is withdrawn from the user. By way of example, feedback device **100** may include a visual element, such as an LED light, configured to provide visual feedback. By way of another example, processing circuit **30** may provide a visual indication on display device **70** or remove the visual indication from display device **70**. For example, processing circuit **30** may provide visual feedback in the form of a message (e.g., a warning, an update, etc.) or direction arrow (e.g., indicating a direction of an object, etc.) on display device **70**.

Feedback Derived from Outputs of an Electronic Game

[0086] In some embodiments, feedback system **10** uses multi-channel audio data or information to localize the origin of sounds in a game and converts the sound information to feedback (e.g., haptic feedback, etc.) that indicates the virtual spatial location of the audio to the user. Feedback device **100** may connect (via any suitable wireless or wired protocol) to an audio output of feedback system **10** (e.g., a game console, a computer, a smart phone, a tablet, an audio receiver, etc.) and obtain three-dimensional audio information. Multi-channel audio operates by varying the intensity and timing of sounds to create the illusion that the sounds are being generated from a specific spatial location relative to the hearer. Feedback system **10**, via processing circuit **30**, may interpret raw multi-channel audio data and determine where sounds are arising from relative to the user. Processing circuit **30** may then convert the audio data into feedback to help the user better identify where the sounds are coming from. In turn, processing circuit **30** is configured to provide, for example, haptic feedback to a user via feedback device **100** to indicate specific range, elevation, and/or bearing information that may be substantially easier to interpret than audio coming from headphones or a surround sound system. This may be particularly useful in an electronic game that outputs multi-channel (e.g., 5-channel, 7-channel, etc.) audio where the user is using stereo headphones. Converting the multi-channel audio information into haptic feedback

may increase a user's competitive advantage in the electronic game. The user may be able to more quickly identify, for example in a first-person shooter game, where shots are coming from than if the user were solely using the stereo headphones. For example, if a virtual character is being shot at in a first-person shooter game, and the user cannot locate where it is coming from, feedback device **100** may provide the user with haptic feedback to allow the user to identify the origin (e.g., the location relative to the virtual character, etc.) of the sound (e.g., a gunshot, etc.). This also facilitates the integration of feedback system **10** with an electronic game without the source code of the electronic game supporting feedback system **10**.

[0087] In some embodiments, a similar concept may be generalized to convert many different types of in-game information into feedback. For example, many electronic games display a "bird's eye view" map, showing the location and/or orientation of the primary object, team members of the user of the primary object, and/or secondary objects (e.g., opponents, enemies, etc.) within a virtual environment. Processing circuit **30** may interpret this visual information and convert it to feedback, thereby not requiring the user to actually look at the in-game map. There are numerous other features expressed visually within an electronic game that may also be converted to feedback to be provided to a user of feedback system **10**.

[0088] In one embodiment, a portable device (e.g., a mobile phone, smartphone, tablet, a laptop, a camera enabled device, portable device **76**, etc.) includes and/or operates a computer vision or machine vision application (e.g., stored in memory of the portable device and controlled by a processing circuit of the portable device, etc.) that uses a sensor (e.g., a camera or other sensor, portable device sensor **96**, etc.) of the portable device. The machine vision application is communicably and operatively coupled to the sensor to monitor and/or observe particular user interface (UI) features of the electronic game displayed on display device **70**. The UI features may include features such as a virtual environment, a radar, a map, a primary object, a secondary object, and/or other display features or symbols that symbolically provide representations of information (e.g., location, movement, affiliation, display data, etc.) regarding secondary objects (e.g., other players, teammates, enemies, obstacles, etc.). The machine vision application may be configured to interpret the UI features and/or symbols and selectively communicate the information from the UI features to feedback device **100**. Feedback device **100** may then provide the information to the user through haptic, visual, and/or audible feedback.

[0089] The information from the UI features may be provided to a wearer of feedback device **100** through a tactile output, a visual output, an audio output, or a combination thereof. For example, the sensor of the portable device and the machine vision application may determine that a secondary object (e.g., a virtual enemy, etc.) is coining up behind the primary character of the user in a virtual environment. In this case, the output may be an audio indication such as, but not limited to, an audible output providing the phrase "Behind you!", "At your six," or the like. Alternatively, the audible output may be used in conjunction with a tactile output which may more accurately indicate where the secondary object is (e.g., relative to the primary object or character, etc.) or may indicate some other characteristic about the secondary object (e.g., speed, type, threat level, affiliation, distance, etc.).

[0090] In some embodiments, the machine vision application may be configured (e.g., programmed and/or tuned, etc.) for specific electronic game titles, electronic game types (e.g., first person shooters, third-person shooters, racing, turn-based, sports, etc.), game consoles (e.g., PC, Xbox® PlayStation®, Nintendo®, etc.), and/or styles of different electronic game developers. In some embodiments, the machine vision application is configured to automatically recognize (e.g., detect, identify, etc.) the electronic game that the sensor is monitoring (e.g., trying to interpret, etc.) based on the UI features on the display of display device **70**. The machine vision application may be further configured to implement feedback settings and/or parameters specifically designed for the particular electronic game detected (e.g., user defined according to preference and/or difficulty, predefined within the machine vision application, etc.). In other embodiments, the machine vision application is configured to prompt a user to input an identifier (e.g., title, etc.) indicative of the electronic game he or she desires to use the machine vision application with (e.g., via a drop down menu and/or fill in box provided by a graphical user interface of the machine vision application of portable device **76**, etc.). In some embodiments, the machine vision system may use a generalized setting when the machine vision application is presented UI features (e.g., which are presented on the display to the sensor of the portable device, etc.) that the machine vision application may not necessarily be preprogrammed for or recognize. Further, in some embodiments, the machine vision application is configured to adaptively learn (e.g., through machine learning techniques, etc.) unfamiliar or unknown virtual environments that are presented before the sensor of the portable device, such that when presented with the same virtual environment on multiple occasions, the machine vision application may improve performance over time (e.g., an adaptive or continuing learning application, such that unknown virtual environments become known and stored in memory for subsequent use, etc.).

[0091] Referring now to FIG. **6**, portable device **76** may be used to facilitate the integration of feedback system **10** with an electronic game without the source code of the electronic game supporting feedback system **10**. For example, feedback may be provided to a user of an electronic game via the feedback system **10** without the feedback system **10** having to be directly connected to the electronic game, without the software of the electronic game having to be altered to support the feedback system **10**, and/or via a user's personal portable device(s) **76** (e.g., smartphone, tablet, laptop, webcam, other camera enabled device, etc.). Therefore, feedback may be provided from a feedback system **10** that is completely external from (e.g., not connected to, may or may not be supported by, not in communication with, etc.) the electronic game and display device **70**.

[0092] As shown in FIG. **6**, portable device **76** may be positioned such that portable device sensors **96** (e.g., a camera device, etc.) is able to acquire information and/or display data from virtual environment **110** currently being displayed by display device **70**, such as television **72** or other display devices (e.g., a monitor, a projection screen, etc.). According to one embodiment, portable device sensors **96** of portable device **76** are insensitive to the precise orientation of portable device **76**. Portable device **76** may

thereby acquire the display data from virtual environment **110** irrespective of the orientation (e.g., tilt angle, view angle, etc.) of portable device **76** relative to display device **70** (e.g., as long as portable device sensor(s) **96** have some line of sight of virtual environment **110**, etc.).

[0093] Virtual environment **110** may include various display data that provide indications regarding the current location of the primary object P_1 (e.g., within a map, virtual world, etc.), surrounding virtual objects (e.g., secondary objects, houses, buildings, vehicles, geographical landscapes, etc.), a direction of travel (e.g., of the primary object, of one or more secondary objects, etc.), a rate of travel (e.g., velocity, acceleration, of the primary object, of one or more secondary objects, etc.), range information (e.g., between the primary object and one or more secondary objects, etc.), bearing information (e.g., between the primary object and one or more secondary objects, etc.), affiliation information (e.g., of one or more secondary object, etc.), threat level information (e.g., of one or more secondary objects, etc.), attribute information (e.g., of one or more secondary objects, etc.), a gaze direction (e.g., of the primary object, of one or more secondary objects, etc.), etc.

[0094] As shown in FIG. **6**, virtual environment **110** may also include a bird's eye view map, shown as radar map **112** (e.g., located in a corner of the display, etc.). Radar map **112** may display the location and/or orientation of the primary object P_1, team members of the user of the primary object P_1, and/or secondary objects (e.g., opponents, enemies, O_1, O_2, O_3, etc.) relative to each other within virtual environment **110**. Radar map **112** may provide display data including relative positions (e.g., of primary object P_1 to secondary objects O_1, O_2, etc.), range and/or distance (e.g., between primary object P_1 to secondary objects O_1, O_2, etc.), and/or bearing (e.g., between primary object P_1 to secondary objects O_1, O_2, etc.), among other possibilities.

[0095] According to one embodiment, portable device **76** is configured to acquire the display data from the display of virtual environment **110** and/or radar map **112** with portable device sensors **96**. According to an example embodiment, portable device **76** enables a user of an electronic game to acquire the display data for feedback purposes (e.g., haptic, audible, visual, etc.) without requiring the purchase of additional hardware components (e.g., the user may utilize commonly owned camera enabled portable electronic devices, etc.). In one embodiment, portable device **76** includes processing circuitry (e.g., such as processing circuit **30**, an application stored within the memory of portable device **76**, etc.) configured to analyze the display data. Therefore, portable device **76** may include at least a portion of sensor system **90** (e.g., portable device sensors **96**, etc.) and at least a portion of control system **20** such as processing circuit **30**, sensor module **50**, and/or feedback module **60**. In other embodiments, portable device **76** is configured to provide the display data to an external control system **20** for further processing and analysis (e.g., portable device **76** acts as at least a portion of sensor system **90** only, etc.) for feedback purposes as described above.

[0096] Acquiring display data from at least one of virtual environment **110** and radar map **112** allows feedback to be provided when secondary objects may or may not be visible to the user, visible to the primary object, and/or on the screen of display device **70**. For example, feedback may be provided when a secondary object is not visible within virtual environment **110** but is visible on radar map **112** (e.g., secondary objects O_2 and O_3, etc.). In another example, feedback may be provided when a secondary object is visible within virtual environment **110** to the primary object and/or the user (e.g., secondary object O_1, etc.).

[0097] According to an example embodiment, portable device **76** is configured to acquire the display data in real-time and communicate with feedback device **100** to provide feedback to the user of the electronic game. Portable device **76** may communicate with feedback device **100** using any suitable wired and/or wireless communications protocols. Portable device **76** may interpret (e.g., analyze, etc.) the display data to provide various feedback commands (e.g., haptic, visual, audio, etc. feedback) to feedback device **100** based on the display data. The feedback commands may provide indications to the user of feedback device **100** regarding position, range, bearing, velocity, among other possibilities, of secondary objects (e.g., opponents, enemies, threats, etc.) relative to the primary object P_1 controlled by the user. Thus, the user may not need to focus on the radar map **112** and/or peripheral areas of virtual environment **110**, thereby increasing the user's competitive advantage in the electronic game (e.g., the user is able to focus on a more important task, on the environment ahead, etc.).

Feedback Regarding a User of a Virtual Character

[0098] Referring now to FIGS. **7A-7B**, feedback system **10** may be configured to provide feedback to the user of an electronic game based on object data. The object data may provide an indication to a location, size, a proximity/distance, and/or a velocity of a physical object relative to the user and/or other characteristics of the physical object relative to the user in the physical environment. This may be particularly useful in situations where a user is playing an electronic game where he/she is physically moving (e.g., walking around, etc.) while wearing a display device, such as VR glasses **74**, that at least partially obstructs the user's view of the surrounding physical environment.

[0099] As shown in FIG. **7A-7B**, user P_1 is wearing VR glasses **74**. In one embodiment, VR glasses **74** include portable device **76** disposed therein (e.g., within portable device retainer **78**, etc.) or detachably attached thereto (e.g., an exterior wall thereof, via portable device retainer **78**, etc.). In other embodiments, VR glasses **74** do not include portable device **76** or facilitate the coupling of portable device **76** thereto. In one embodiment, VR glasses **74** provide a display of virtual environment **110** that the virtual character of user P_1 is within. In other embodiments, portable device **76** provides a display of virtual environment **110** that the virtual character of user P_1 is within. As shown in FIG. **7A**, VR glasses **74** and/or portable device **76** at least partially obstruct the user's view of the surrounding environment such that the user P_1 may be unaware of physical objects, such as object **120** (e.g., a wall, a stool, a piece of furniture, stairs, other hazard, other people, etc.), as he/she walks around the surrounding environment to navigate throughout virtual environment **110**.

[0100] As described above, sensor system **90** is configured to acquire the object data regarding objects **120** located within the physical environment surrounding the user of feedback system **10** such that feedback device **100** may provide feedback to the user regarding objects **120** (e.g., elements **102** are selectively and/or dynamically activated and deactivated by control system **20** based on the object data, etc.). Sensor system **90** may also be configured to track

movement of the user to correspond with movement and/or actions taken by the virtual character within virtual environment **110**. Sensor system **90** may include an external sensor system including sensors, shown as external sensors **92**, positioned throughout the physical environment, sensors position within or disposed on feedback device(s) **100** (e.g., user sensors **94**, etc.) and/or display device **70** (e.g., VR glasses **74**, etc.), and/or portable device sensors **96** of portable device **76**. External sensors **92** may include, but are not limited to, personal security cameras, webcams, game console cameras (e.g., Kinect, etc.), computer and/or laptop cameras, and/or other sensors positioned within a user's residence or gaming area to monitor a user and/or a physical environment. The sensors of VR glasses **74** and/or portable device sensors **96** of portable device **76** may include a still camera, a video camera, a gyroscope, an accelerometer, a compass, a proximity sensor, a radar, a lidar, and/or still other sensors. Sensor system **90** may include any combination of VR glasses sensors, user sensors **94**, portable device sensors **96**, and external sensors **92**. In some embodiments, multiple sensors create a network of sensors that are used to generate a 3D image of the user and the surroundings to increase the feedback capabilities and accuracy of the feedback system **10**.

[0101] The feedback provided by feedback system **10** regarding object **120** may provide an indication that user P_1 is nearing object **120**. The feedback may encode information such as a range, bearing, and/or an anticipated time until a collision (e.g., based on the relative position and velocity, etc.) between object **120** and user P_1. The feedback may provide the information through different classes of sensations (e.g., tactile, audible, visual, etc.), different intensities, different frequencies, and/or different pulse patterns. Further, feedback system **10** may provide vestibular stimulation which may cause the head of the user to bob or recoil to indicate that he/she is about to run into an object. Thus, the feedback may substantially prevent user P_1 from walking into objects **120** while walking around and immersed within virtual environment **110**.

[0102] As shown in FIG. **7**B, feedback system **10** may insert an associated virtual representation of object **120** into virtual environment **110**, shown as virtual object **122**. Virtual object **122** may be positioned within virtual environment **110** to correspond with the position of object **120** relative to user P_1 within the physical environment. Virtual object **122** may be inserted as a virtual indication to represent object **120**, but the appearance of virtual object **122** may be based on the electronic game being played (e.g., the physical appearance of virtual object **122** may not resemble object **120**, etc.). For example, in a war game, virtual object **122** may be a tank or other vehicle, a missile, a fence, a building wall, etc.; while in an adventure game, virtual object **122** may be a tree, a boulder, a river, etc. In other embodiments, virtual object **122** is a substantially identical virtual representation of object **120**. Virtual objects **122** may be inserted into virtual environment **110** in real-time or prior to game play (e.g., using the pre-scanning method described above, etc.). Inserting virtual objects **122** into virtual environment **110** may provide a seamless gameplay experience such that the user may react to virtual objects **122** as if he/she could see objects **120** in the physical surroundings. Thus, the display of virtual objects **122** within virtual environment may substantially prevent user P_1 from walking into objects **120** within the physical environment.

[0103] Feedback system **10** may also be able to monitor the condition of the user of the virtual character (e.g., based on condition data, etc.) using various sensors positioned around the physical environment (e.g., external sensors **92**, etc.) and/or embedded on/within the component of feedback system **10** (e.g., feedback device **100**, display device **70**, etc.). Thus, sensor system **90** may acquire condition data indicative of a condition of the user. For example, feedback system **10** may be configured to monitor conditions of the user such as heart rate, breathing patterns, temperature, sleeplessness/alertness, time of game play, SpO_2 levels, glucose levels, hydration levels, and/or other conditions that may be affected by extended or intense game play. Feedback system **10** may be configured to provide feedback to the user regarding his/her physical condition (e.g., changes thereof, condition readings exceeding or falling below a threshold value, etc.) such that the user may take appropriate action (e.g., stop playing, get some sleep, eat some food, drink some fluids, etc.).

Real-World Feedback System

[0104] According to the example embodiment shown in FIGS. **1** and **8**-**10**C, feedback system **10** (e.g., situational awareness system, etc.) is configured to provide feedback for real-world applications. For example, feedback system **10** may be used for driving, treatment for sight or hearing-impaired persons, aviation, sports, combat, construction, etc.

[0105] Referring now to FIG. **8**, area **200**, usable in connection with feedback system **10**, is shown according to one embodiment. As shown in FIG. **8**, area **200** includes a ground surface **202** upon which a user, such as user P_1 (e.g., an athlete, a motor vehicle operator, a military personnel, construction worker, etc.), is moving. In some embodiments, user P_1 is participating in an athletic event (e.g., a paintball game, football game, an automotive race, etc.) where opponents (e.g., other users, other vehicles, etc.), such as opponents O_1, O_2, and O_3, or other obstacles (e.g., walls, posts, vehicles, etc.) are present.

[0106] In one embodiment, area **200** includes one or more external sensors **92** (e.g., remote sensors, etc.) configured to acquire external data (e.g., second data, etc.), gaze data, and/or environment data. External sensors **92** may be positioned around or within area **200**, and configured to acquire various data regarding area **200**, the user P_1, and/or opponents O_1, O_2, and O_3. External sensors **92** may include any suitable sensors configured to detect the position, movement (e.g., velocity, acceleration, etc.), gaze direction, identity (e.g., team affiliation, etc.), etc. of the user P_1 and/or opponents O_1, O_2, and O_3. As discussed in further detail below, additional sensors may be worn by user P_1 (e.g., as part of a head protection device, torso protection device, leg protection device, one or more head, wrist or ankle bands, as part of a team uniform, etc.) and used to acquire data regarding various users, objects, and/or a surrounding area.

[0107] Referring now to FIG. **9**, user P_1 is a paintball player. In other embodiments, user P_1 may be a racecar driver, a football player, a soldier, a construction worker, a surgeon, or another person using feedback system **10**. As shown in FIG. **9**, user sensors **94** are configured to be worn by, carried by, or travel with a user such as user P_1. User sensors **94** may be positioned at various locations about one or more pieces of equipment or clothing worn by user P_1. In one embodiment, user sensors **94** are provided in or on headgear **104** (e.g., a helmet, a head protection device, etc.).

In some embodiments, user sensors **94** are provided on one or more articles of clothing **108** or bands **106**, such as a uniform, jersey, shirt, pants, belt, or a head or wrist band, etc. In some embodiments, opponents O_1, O_2, and/or O_3 wear at least one of headgear **104**, bands **106**, and clothing **108** including user sensor **94** and use feedback system **10**.

[0108] User sensors **94** may be or include a wide variety of sensors configured to acquire various types of data regarding user P_1 (e.g., user data, first data, condition data, gaze data, etc.), area **200** (e.g., environment data, etc.), opponents O_1, O_2, and O_3 (e.g., second data, gaze data, etc.), and the like. For example, in one embodiment, user sensors **94** are configured to acquire user data regarding a user wearing user sensors **94**. The user data may include a position of the user, an acceleration and/or velocity of the user, positions and/or orientations of various body parts of the user, and so on. In some embodiments, user sensors **94** are configured to acquire user data and/or gaze data regarding other users or objects (e.g., in addition to or rather than the user wearing sensors **94**). The user data and/or gaze data may include a position of another user, an acceleration and/or velocity of the other user, positions and/or orientations of various body parts of the other user, an affiliation of the other user, a gaze direction of the other user, and so on. In addition, various data may be obtained in absolute terms (e.g., position, velocity, acceleration) and transformed into relative terms for two or more users (e.g., by comparing absolute values of various users, etc.).

[0109] In one embodiment, user sensors **94** are or include an inertial sensing device, such as an accelerometer, a gyroscope, and the like. In other embodiments, user sensors **94** are or include an image capture device, such as a still image and/or video camera. In further embodiments, user sensors **94** include a GPS receiver. In addition to such passive sensors, user sensors **94** may in some embodiments be or include an active sensor, such as a lidar system, radar system, sonar system (e.g., an ultrasonic sonar or sensing system), etc.

[0110] In other embodiments, user sensors **94** are configured to provide data regarding team affiliations of various users. For example, user sensors **94** in some embodiments are or include a beacon, such as an RFID tag, that may be carried by each user. The RFID tags may provide team affiliation data, and may provide user-specific data, such as a user height, weight, etc. (e.g., through near field communication, etc.). In one embodiment, the beacons communicate with one another. In other embodiments, signals from the beacons are received by external sensors **92** to be provided to control system **20**.

[0111] In one embodiment, user sensors **94** are configured to acquire gaze data indicative of an orientation of a user's head (e.g., a direction in which the user is facing, a tilt of the head relative to the horizon, etc.). As such, user sensors **94** may be spaced about the user's head to form a sensor array configured to acquire positional data regarding the orientation of the user's head. In some embodiments, user sensors **94** are configured to scan an environment to acquire environment data regarding potential hazards or dangers near the user. In some embodiments, user sensors **94** are configured to acquire condition data regarding a condition of the user.

[0112] In some embodiments, feedback system **10** is implemented as part of a vehicle operator system, such that one or more user sensors **94** are provided as part of a vehicle. For example, a vehicle may include one or more user sensors **94** configured to provide sensor data to control system **20** regarding other vehicles or objects. Furthermore, the vehicle (e.g., a vehicle computer or control system, etc.) may be configured to provide additional data regarding operation of the vehicle, such as information regarding velocity, acceleration, braking conditions, and the like. A user (e.g., a motorcycle operator, a racecar driver, a bicycle rider, etc.) may wear a head protection device such as headgear **104** (e.g., helmet such as a football, baseball, or hockey helmet, a motorcycle or bicycle helmet, a soldier helmet, a ski helmet, etc.) configured to house additional user sensors **94** and/or portions of control system **20** and provide feedback. For example, feedback may be provided to a driver of a first vehicle to indicate that a driver of a second vehicle is in the blind spot of the driver of the first vehicle. As a result, the feedback may substantially reduce the likelihood of a collision between the two vehicles.

[0113] Referring back to FIGS. **8-9**, the various sensors (e.g., external sensors **92**, user sensors **94**, etc.) acquire data regarding user P_1, opponents O_1, O_2, O_3, and/or area **200** and provide the data to control system **20**. Control system **20** is configured to control operation of feedback device **100** to provide feedback (e.g., haptic feedback, visual feedback, audible feedback, etc.) to user P_1 based on the data received from sensor system **90** (e.g., external sensors **92**, user sensors **94**, etc.). For example, referring further to FIG. **8**, user P_1 is shown to be within area **200**, along with opponents O_1 and O_2. Opponents O_1 and O_2 are in close proximity (e.g., pose a possible threat, etc.) to user P_1, while opponent O_3 is not within a close proximity (e.g., does not pose a threat, substantially far from user P_1, not in play, etc.). As such, based on sensor data (e.g., head orientation, affiliation, position, movement, external data, user data, etc.) from sensor system **90**, control system **20** is configured to provide feedback to user P_1 via feedback device **100**. In one embodiment, feedback device **100** provides the user with feedback such that the user has a heightened awareness of the opponents and/or threats outside of his/her field of view. For example, opponent O_2 is not within the field of view of user P_1 such that user P_1 is unable to see opponent O_2. In other embodiments, feedback device **100** further provides the user with feedback for opponents within the user's field of view to reinforce the intuitive understanding of what each vibration or other type of feedback (e.g., audible, visual, etc.) represents or to establish an affiliation of the person in the user's field of view. For example, opponent O_1 is within the field of view of user P_1 such that user P_1 is able to see opponent O_1.

[0114] In one embodiment, feedback device **100** provides the user with feedback based on the gaze data such that the user has a heightened awareness of the opponents and/or threats that may be looking at them. The gaze data may provide an indication to the position and view angle of the opponents. The position of user and opponents may be defined by a global coordinate system such as a Cartesian coordinate system (X position, Y position, Z position, etc.) within area **200**. The view angle of the opponents may be defined based on the orientation of a user's head. Thus, based on the position of the user, and the position and view angle of the opponent, control system **20** may determine whether the user is in or substantially near being within the opponent's line of sight. In some embodiments, feedback device **100** provides the user with feedback based on the

gaze direction of opponents and/or a distance of the opponents relative to the user, as described above.

[0115] In some embodiments, sensor system **90** is configured to acquire environment data regarding potential hazards or dangers near the user. Feedback device **100** may provide feedback to the user based on the environment data and/or the user data. For example, a construction worker may be using feedback system **10** while working on a construction site. The feedback system **10** may monitor the surrounding area for potential hazards such as ledges, stairs, holes, trenches, hot surfaces or objects, hazardous materials or chemicals, sharp objects, moving equipment (e.g., vehicles, conveyor belts, rotating machinery, etc.), etc. Thus, if a user of feedback system **10** were to approach the hazard (e.g., unknowingly, etc.), feedback system **10** may be configured to warn the user not to move any closer, avoid contact, move in a proposed direction, etc. to prevent the user from encountering or engaging the hazard or danger (e.g., such that the user avoids the danger or hazard all together, to try to prevent harm from being inflicted onto the user, etc.). For example, a construction worker may be working on a skyscraper where there is a risk of falling over an edge of one of the floors. Feedback system **10** may be configured to warn the user when they approach the edge of the building such that they do not move any closer. In another example, sensor system **90** may include infrared cameras (e.g., in a manufacturing environment, in a labspace, etc.) that may facilitate feedback system **10** to warn a user not to touch an object or keep hands away because of a relatively hot surface. In yet another example, feedback system **10** may be configured to warn the user to move or not to move based on approaching objects or equipment (e.g., vehicles, fork lifts, cranes, tractors, skid-loaders, not in the sight of the user, etc.).

[0116] Feedback system **10** may also be able to monitor the condition of the user. Thus, sensor system **90** may acquire condition data indicative of a condition of the user. For example, feedback system **10** may be configured to monitor conditions of the user such as heart rate, breathing patterns, temperature, sleeplessness/alertness, SpO_2 levels, glucose levels, hydration levels, and/or other conditions that may be affected during sports, physical activity (e.g., running, etc.), and/or work (e.g., construction, surgery, etc.). Feedback system **10** may be configured to provide feedback to the user regarding his/her physical condition (e.g., changes thereof, condition readings exceeding or falling below a threshold value, etc.) such that the user may take appropriate action (e.g., take a break, get some sleep, eat some food, drink some fluids, etc.).

Communication Protocols

[0117] Referring now to FIGS. **10**A-**10**C, user P_1, opponents O_1 and O_2, sensor system **90**, and/or control system **20** may communicate with each other in a variety of ways, using any suitable wired and/or wireless communications protocols. User P_1 generally includes one or more user sensors **94** and one or more feedback devices **100** (see, e.g., FIG. **9**). In one embodiment, control system **20** is implemented as a remote system configured to communicate with one or more users of feedback system **10** (e.g., via corresponding feedback devices **100**, etc.). For example, referring to FIG. **10**A, user P_1, opponent O_1, and opponent O_2 are configured to communicate user data, gaze data, and/or environment data to control system **20**, which is in turn configured to receive external data, gaze data, and/or environment data from external sensors **92**. Control system **20** is configured to provide feedback to each user based on at least one of user data, gaze data, environment data, and external data to increase the awareness of each user regarding threats around them (e.g., opponents, etc.).

[0118] In other embodiments, control system **20** is implemented into equipment worn, carried, or otherwise moving with the users of feedback system **10**, such that the devices of user P_1 and opponents O_1 and O_2 can communicate directly with one another. For example, referring to FIG. **10**B, user sensors **94** are configured to acquire user data, gaze data, and/or environment data regarding user P_1 and/or opponents O_1 and O_2. Based on the user data, gaze data, and/or environment data, control system **20** of the respective user (e.g., user P_1, opponent O_1, etc.) is configured to provide feedback to the user. In one embodiment, users with the same affiliation (e.g., same team, etc.) communicate with one another (e.g., regarding feedback received, etc.) such that a user may receive advanced notification of opponents/enemies near other users with the same affiliation. This example embodiment is able to be used in ad hoc environments (e.g., unfamiliar environments, hostile environments, environments without external sensors **92**, etc.). For example, the configuration shown in FIG. **10**B may be implemented with soldiers in hostile environments or for training purposes.

[0119] In further embodiments, user P_1, opponent O_1, and/or opponent O_2 are configured to communicate user data, gaze data, and/or environment data to at least one of control system **20** and other users/opponents, which are in turn configured to receive gaze data, environment data, and/or external data from external sensors **92**. For example, referring to FIG. **10**C, control system **20** is configured to provide feedback to each user based on at least one of the user data, the gaze data, the environment data, and the external data to increase the awareness of each user regarding threats around them (e.g., opponents, etc.). In one embodiment, users with the same affiliation (e.g., same team, etc.) communicate with one another (e.g., regarding feedback received, etc.) such that a user may receive advanced notification of opponents/enemies near other users with the same affiliation.

Feedback Actuation Functions

[0120] According to an exemplary embodiment, processing circuit **30** is configured to provide feedback to the user of feedback device **100** based on a feedback actuation function. The feedback actuation function may include a presence actuation function, a distance actuation function, and/or a direction actuation function. The presence actuation function is configured to provide a sense of a presence of an object (e.g. another person, a secondary object, within a proximity of the user or primary object, etc.). The sense of the presence may include a sense of a scale, an energy, a mass, a movement capability, a nature, and a threat level of the object, among other possibilities. The presence actuation function may provide a user or give the user the ability to provide a sense of a threat or friendliness. For example, a user may receive feedback from another person, such as a stroke along the back or a hugging sensation, to provide a sense of comfort. This may be implemented in situations such as a parent providing comfort to his/her premature baby that is isolated from physical contact or family members

living apart from one another and being able to give a loved one a simulated hug, among other examples.

[0121] The distance actuation function is configured to provide a sense of a distance of an object relative to the user or primary object. The direction actuation function is configured to provide a sense of a direction of an object relative to the user or primary object. The relative priority of the presence actuation function, the distance actuation function, and the direction actuation function may vary responsive to the distance, the direction, and the nature of the object relative to the user or primary object. In some embodiments, the feedback actuation function is based on the relative position of elements **102** on the user of feedback device **100**, the relative position of the user, and/or the relative position of the object. By way of example, feedback may need to be provided in a desired location, however the position of elements **102** may not facilitate the application of feedback in the desired location. Therefore, the feedback actuation function may actuate various elements **102** around the desired location. For example, processing circuit **30** may actuate elements **102** in a circular pattern around the desired location to indicate the location in which feedback is desired to be provided.

[0122] The feedback actuation function may be a continuous function, a discrete function, a linear function, a non-linear function, or any combination thereof. By way of example, the distance actuation function may increase an amplitude of the feedback linearly as an object (e.g., another person, a secondary object, etc.) gets closer to the user or primary object, or vice versa (e.g., inversely proportional to the distance, etc.). By way of another example, the distance actuation function may increase the amplitude of the feedback non-linearly (e.g., exponentially, quadratically, etc.) as an object (e.g., another person, a secondary object, etc.) gets closer to the user or primary object, or vice versa.

[0123] In one embodiment, processing circuit **30** is configured to modify the feedback actuation function responsive to a user response to previously-provided feedback (e.g., reduce, amplify, alter, etc.). The user response may include, but is not limited to, a body movement, a head movement, a temperature, a heart rate, a skin conductivity, a facial expression, a vocal expression, pupil dilation, brain waves, and/or a brain state. By way of example, processing circuit **30** may actuate various elements **102** as a user of feedback device **100** rotates his/her head. For example, processing circuit **30** may provide a vibration to a side of a user's head to indicate an object is to the user's side. As the user turns his/her head, the direction actuation function may modify which elements **102** provide feedback to the user such that the vibrations move as the user's head turns until the user's head is facing the indicated direction (e.g., the vibrations may move counter-clockwise as the user turn his/her head clockwise, etc.). The various functions disclosed herein may be embodied as instructions or programs implemented on or accessed by feedback system **10**. In one embodiment, the instructions and/or programs are stored locally in memory (e.g., memory **38**, etc.) of feedback system **10**. In another embodiment, the instructions and/or programs are accessed via any suitable wired or wireless communication protocol to an external memory or via the Internet. Access to the Internet may provide for the ability to update the instructions and/or programs of feedback system **10** (e.g., periodically, when an update is released, etc.).

Methods of Providing Feedback

[0124] Referring now to FIG. **11**, method **300** for providing feedback to a user is shown according to an example embodiment. In one example embodiment, method **300** may be implemented with electronic game feedback system **10** of FIGS. **1-7**B. In another example embodiment, method **300** may be implemented with feedback system **10** of FIGS. **1** and **8-10**C. Accordingly, method **300** may be described in regard to FIGS. **1-7**B and/or FIGS. **1** and **1-10**C.

[0125] At **302**, first data is received. In one embodiment, the first data includes data regarding a user of a primary object (e.g., gaze data, condition data, movement, etc.). In another embodiment, first data includes data regarding a primary object in a virtual environment (e.g., gaze data, condition data, etc.). In an alternative embodiment, the first data may include user data regarding a user involve in a real world event (e.g., a race, an athletic event, combat, etc.). At **304**, second data is received. In one embodiment, the second data includes data regarding a secondary object (e.g., another virtual character, threat object, gaze data, condition data, movement, attributes, etc.). In another embodiment, the second data includes event data. In an alternative embodiment, the second data includes data regarding an opponent (e.g., an enemy, another vehicle, other team, etc.), object data, display data, and/or external data. At **306**, feedback is provided. In one embodiment, feedback is provided to a user of a primary object based on user data, primary object data, secondary object data, and/or event data. In an alternative embodiment, feedback is provided to a user based on user data regarding a user, user data regarding an opponent, and/or external data. In some embodiments, feedback is provided to a user based on at least one of user data, gaze data, condition data, event data, environment data, external data, display data, and object data. The feedback may be haptic, audible, visual, combinations thereof, etc.

[0126] Referring now to FIG. **12**, method **400** for providing continual feedback to a user is shown according to an example embodiment. In one example embodiment, method **400** may be implemented with electronic game feedback system **10** of FIGS. **1-7**B. In another example embodiment, method **400** may be implemented with feedback system **10** of FIGS. **1** and **8-10**C. Accordingly, method **400** may be described in regard to FIGS. **1-7**B and/or FIGS. **1** and **8-10**C.

[0127] At **402**, initial first data is received. In one embodiment, the first data includes data regarding a user of a primary object (e.g., gaze data, condition data, movement, etc.). In another embodiment, first data includes data regarding a primary object in a virtual environment (e.g., gaze data, condition data, etc.). In an alternative embodiment, the first data may include user data regarding a user involve in a real world event (e.g., a race, an athletic event, combat, etc.). At **404**, initial second data is received. In one embodiment, the second data includes data regarding a secondary object (e.g., another virtual character, threat object, gaze data, condition data, movement, attributes, etc.). In another embodiment, the second data includes event data. In an alternative embodiment, the second data includes data regarding an opponent (e.g., an enemy, another vehicle, other team, etc.), object data, display data, and/or external data. At **406**, initial feedback is provided. In one embodiment, feedback is provided to a user of a primary object based on user data, primary object data, secondary object data, and/or event

data. In an alternative embodiment, feedback is provided to a user based on user data regarding a user, user data regarding an opponent, and/or external data. In some embodiments, feedback is provided to a user based on at least one of user data, gaze data, condition data, event data, environment data, external data, display data, and object data. The feedback may be haptic, audible, visual, combinations thereof, etc.

[0128] At **408**, updated first data is received. For example, the initial first data received at **402** is updated based on a new position, gaze direction, condition, movement, etc. of the user and/or primary object. At **410**, updated second data is received. For example, the initial second data received at **404** is updated based on a new position, gaze direction, condition, movement, etc. of the secondary object or opponent, or a change in the electronic game situation (e.g., a new event, level, etc.). At **412**, updated feedback is provided based on the updated first data and the updated second data. In one embodiment, **408-412** are repeated to provide continuous feedback to a user of feedback system **10**. As noted elsewhere herein, the feedback may include tactile/haptic, visual, audible, or other types of feedback or combinations thereof.

[0129] Referring now to FIG. **13**, method **500** for providing feedback to a user is shown according to another example embodiment. In one example embodiment, method **500** may be implemented with electronic game feedback system **10** of FIGS. **1-7**B. Accordingly, method **500** may be described in regard to FIGS. **1-7**B.

[0130] At **502**, a display device (e.g., VR glasses **74**, portable device **76**, etc.) provides a display of a virtual environment associated with an electronic game to a user. The display device may at least partially obstruct the view of the user of a physical environment surrounding the user. At **504**, a sensor system (e.g., sensor system **90**, portable device sensors **96**, user sensors **94**, external sensors **92**, VR glasses sensors, etc.) acquires object data regarding an object located within the physical environment. At **506**, a feedback device (e.g., feedback device **100**, etc.) provides feedback (e.g., haptic feedback, audible feedback, visual feedback, etc.) to the user based on the object data. The feedback may be indicative of a location of the object relative to the user. In some embodiments, the feedback includes the display device displaying a virtual representation of the physical object within the virtual environment. The virtual representation may provide an indication of a location of the physical object relative to the user within the physical environment.

[0131] Referring now to FIG. **14**, method **600** for providing feedback to a user is shown according to another example embodiment. In one example embodiment, method **600** may be implemented with electronic game feedback system **10** of FIGS. **1-7**B. Accordingly, method **600** may be described in regard to FIGS. **1-7**B.

[0132] At **602**, a processing circuit (e.g., of haptic feedback system **10**, of portable device **76**, etc.) receives display data from a sensor system (e.g., sensor system **90**, portable device sensors **96**, external sensors **92**, user sensors **94**, etc.). The display data may be acquired by the sensor system from a display of a virtual environment associated with the electronic game provided by a display device (e.g., television **72**, etc.). The electronic game may be associated with a primary object and a secondary object. The display data may be indicative of characteristics of at least one of the virtual environment, the primary object, and the secondary object. At **604**, the processing circuit provides a command to a feedback device (e.g., feedback device **100**, etc.) to provide feedback (e.g., haptic feedback, audible feedback, visual feedback, etc.) to the user based on the display data.

[0133] In some embodiments, the processing circuit is configured to identify the electronic game the sensor system is monitoring based on features provided by the display. The features may include at least one of the virtual environment, the primary object, the secondary object, a symbol, a radar, and a map. The processing circuit may be further configured to implement predefined feedback settings based on the detected electronic game. In other embodiments, the processing circuit is configured to prompt the user to manually input an identifier indicative of the electronic game via a portable electronic device (e.g., drop down menu, fill-in box, etc.). The processing circuit may be further configured to implement predefined feedback settings based on the identifier. In some embodiments, the processing circuit is configured to adaptively learn the virtual environment such that unknown virtual environments become known and stored in memory of the processing circuit for subsequent use.

[0134] Referring now to FIG. **15**, method **700** for providing feedback to a user is shown according to another example embodiment. In one example embodiment, method **700** may be implemented with feedback system **10** of FIGS. **8-10**C. Accordingly, method **700** may be described in regard to FIGS. **8-10**C.

[0135] At **702**, a sensor (e.g., external sensor **92**, user sensor **94**, sensor system **90**, etc.) acquires environment data regarding an environment surrounding the user and/or user data regarding at least one of movements, a location, and an orientation of the user within the environment. The environment data may include data regarding the one or more potential hazards or dangers within the environment surrounding the user. The one or more potential hazards or dangers may include at least one of a ledge, stairs, a hole, a trench, a hot objects, a sharp object, a hazardous material or chemical, a moving piece of equipment, and a rotating piece of equipment. At **704**, a feedback device (e.g., feedback device **100**, etc.) provides feedback (e.g., haptic feedback, audible feedback, visual feedback, etc.) to the user based on the environment data and/or the user data indicating the user is near the one or more potential hazards or dangers. According to one embodiment, the feedback is configured to provide an indication to the user to such that the user avoids the one or more potential hazards or dangers within the environment surrounding the user. In some embodiments, the feedback device is a wearable feedback device.

[0136] The present disclosure contemplates methods, systems, and program products on any machine-readable media for accomplishing various operations. The embodiments of the present disclosure may be implemented using existing computer processors, or by a special purpose computer processor for an appropriate system, incorporated for this or another purpose, or by a hardwired system. Embodiments within the scope of the present disclosure include program products comprising machine-readable media for carrying or having machine-executable instructions or data structures stored thereon. Such machine-readable media can be any available media that can be accessed by a general purpose or special purpose computer or other machine with a processor. By way of example, such machine-readable media can comprise RAM, ROM, EPROM, EEPROM, CD-ROM or

other optical disk storage, magnetic disk storage or other magnetic storage devices, or any other medium which can be used to carry or store desired program code in the form of machine-executable instructions or data structures and which can be accessed by a general purpose or special purpose computer or other machine with a processor. When information is transferred or provided over a network or another communications connection (either hardwired, wireless, or a combination of hardwired or wireless) to a machine, the machine properly views the connection as a machine-readable medium. Thus, any such connection is properly termed a machine-readable medium. Combinations of the above are also included within the scope of machine-readable media. Machine-executable instructions include, for example, instructions and data which cause a general purpose computer, special purpose computer, or special purpose processing machines to perform a certain function or group of functions.

[0137] Although the figures may show a specific order of method steps, the order of the steps may differ from what is depicted. Also two or more steps may be performed concurrently or with partial concurrence. Such variation will depend on the software and hardware systems chosen and on designer choice. All such variations are within the scope of the disclosure. Likewise, software implementations could be accomplished with standard programming techniques with rule based logic and other logic to accomplish the various connection steps, processing steps, comparison steps and decision steps.

[0138] While various aspects and embodiments have been disclosed herein, other aspects and embodiments will be apparent to those skilled in the art. The various aspects and embodiments disclosed herein are for purposes of illustration and are not intended to be limiting, with the true scope and spirit being indicated by the following claim.

1. An electronic game feedback system, comprising:

a feedback device configured to provide feedback to a user of an electronic game; and

a processing circuit configured to control operation of the feedback device to provide the feedback to the user based on condition data regarding a condition of a primary object within a virtual environment of the electronic game;

wherein the condition includes at least one of a health level, an armor level, a shield level, and a power level of the primary object.

2-4. (canceled)

5. The electronic game feedback system of claim **1**, wherein the processing circuit is configured to at least one of selectively and dynamically provide a command to the feedback device to activate and deactivate the feedback based on the condition data.

6. The electronic game feedback system of claim **1**, wherein the processing circuit is configured to provide a command to the feedback device to provide the feedback based on the condition data indicating that the condition of the primary object is declining below a threshold value while in the virtual environment.

7-9. (canceled)

10. The electronic game feedback system of claim **1**, wherein the feedback device includes a wearable feedback device.

11. The electronic game feedback system of claim **1**, wherein the feedback provides an indication of the condition of the primary object of the user within the electronic game.

12. The electronic game feedback system of claim **1**, wherein the feedback provides information indicating that the condition of the primary object is declining.

13. The electronic game feedback system of claim **1**, wherein the feedback provides information indicating a current level of the condition.

14. The electronic game feedback system of claim **1**, wherein the feedback provides information indicating how much time before the condition reaches a critical level.

15. The electronic game feedback system of claim **1**, wherein the feedback provides information indicating how much damage can be inflicted to the primary object before the condition reaches a critical level.

16. The electronic game feedback system of claim **1**, wherein the feedback facilitates eliminating the need for the user to look at visual indications of the condition of the primary object provided by a display of the electronic game.

17-24. (canceled)

25. The electronic game feedback system of claim **1**, further comprising a display device configured to provide a display of the virtual environment.

26. (canceled)

27. The electronic game feedback system of claim **25**, wherein the display includes at least one of the primary object and a secondary object.

28. (canceled)

29. The electronic game feedback system of claim **27**, wherein the processing circuit is configured to monitor the condition of at least one of the primary object and the secondary object and provide an indication of the condition of the at least one of the primary object and the secondary object to the user.

30-37. (canceled)

38. The electronic game feedback system of claim **1**, wherein the feedback device is configured to provide the feedback through at least one of (i) different classes of sensations including at least one of a tactile output, a visual output, and an audible output, (ii) different intensities, (iii) different frequencies, and (iv) different pulse patterns.

39. The electronic game feedback system of claim **1**, wherein the feedback device includes vibratory elements configured to provide tactile feedback.

40. (canceled)

41. The electronic game feedback system of claim **1**, wherein the feedback device includes visual elements configured to provide visual feedback.

42. (canceled)

43. The electronic game feedback system of claim **1**, wherein the feedback device includes auditory elements configured to provide audible feedback.

44-48. (canceled)

49. A feedback system for providing feedback regarding a condition of a user, comprising:

a sensor configured to acquire condition data regarding the condition of the user; and

a feedback device configured to provide feedback to the user based on the condition data, the feedback device configured to vary a characteristic of the feedback based on changes in the condition data, wherein the feedback device includes a wearable headgear device.

50-152. (canceled)

153. A method for providing feedback to a user of an electronic game, comprising:

receiving, by a processing circuit, condition data regarding a condition of a primary object within a virtual environment of the electronic game; and

controlling, by the processing circuit, operation of a feedback device to provide feedback to the user of the electronic game based on the condition data;

wherein the condition includes at least one of a health level, an armor level, a shield level, and a power level of the primary object.

154-156. (canceled)

157. The method of claim **153**, wherein controlling the operation of the feedback device comprises at least one of selectively and dynamically providing, by the processing circuit, a command to the feedback device to activate and deactivate the feedback based on the condition data.

158. The method of claim **153**, wherein controlling the operation of the feedback device comprises providing, by the processing circuit, a command to the feedback device to provide the feedback based on the condition data indicating that the condition of the primary object is declining below a threshold value while in the virtual environment.

159-161. (canceled)

162. The method of claim **153**, wherein the feedback device includes a wearable feedback device.

163. The method of claim **153**, wherein the feedback provides an indication of the condition of the primary object of the user within the electronic game.

164. The method of claim **153**, wherein the feedback provides information indicating that the condition of the primary object is declining.

165. The method of claim **153**, wherein the feedback provides information indicating a current level of the condition.

166. The method of claim **153**, wherein the feedback provides information indicating how much time before the condition reaches a critical level.

167. The method of claim **153**, wherein the feedback provides information indicating how much damage can be inflicted to the primary object before the condition reaches a critical level.

168. The method of claim **153**, wherein the feedback facilitates eliminating the need for the user to look at visual indications of the condition of the primary object provided by a display of the electronic game.

169-176. (canceled)

177. The method of claim **153**, further comprising providing, by a display device, a display of the virtual environment.

178. (canceled)

179. The method of claim **177**, wherein the display of the virtual environment includes at least one of the primary object and a secondary object.

180. (canceled)

181. The method of claim **179**, further comprising:

monitoring, by the processing circuit, the condition of at least one of the primary object and the secondary object; and

providing, by the processing circuit via the feedback device, an indication of the condition of the at least one of the primary object and the secondary object to the user through the feedback.

182-189. (canceled)

190. The method of claim **153**, wherein the feedback device is configured to provide the feedback through at least one of (i) different classes of sensations including at least one of a tactile output, a visual output, and an audible output, (ii) different intensities, (iii) different frequencies, and (iv) different pulse patterns.

191. The method of claim **153**, wherein the feedback device includes vibratory elements configured to provide tactile feedback.

192. (canceled)

193. The method of claim **153**, wherein the feedback device includes visual elements configured to provide visual feedback.

194. (canceled)

195. The method of claim **153**, wherein the feedback device includes auditory elements configured to provide audible feedback.

196-304. (canceled)

* * * * *